AUSAVINA
MATERIAL HANDLING SOLUTIONS

AUSAVINA CO., LTD

OPERATION MANUAL
AUSAVINA 90 DEGREE CLAMP M3 (A90CM3)



AUSAVINA Co., Ltd.
No. 944/1 Nguyen Thi Minh Khai St,
Tan Thang Quarter, Tan Binh Ward,
Di An City, Binh Duong Province, Vietnam
Website: www.ausavina.com
Email: sales@ausavina.com
Tel: (+84) 274 3739 448 - (+84) 274 3739 449
Fax: (+84) 274 3739 447

APPLICABLE MODEL of this 90 DEGREE CLAMP M3:

A90CM3

INDEX

Item		Pages
I	Overview	1
II	Technical Specifications	1
	1) Dimensions	2
	2) Spare Part List	3
III	Instructions for Use	6
	1) General Cautions for Operations	6
	2) Device usage	7
IV	Technical Problems & Solutions.....	11
V	Inspection & Maintenance	11
VI	Warranty	12
	Warranty Certificate	13

Note:

- Please read this operation manual carefully before using the device.

- 90 Degree Clamp M3 comes as a set of two.

I. OVERVIEW:

- 90 Degree Clamps M3 is designed for perfect positioning and locking of fascia (apron) to your countertop via mitre joint.
- Compact design, light weight, quick and easy to clamp onto the stone slab in any position.
- User can combine multiple number of 90 Degree Clamps M3 to accommodate (when working with) longer stone slab.

Recommendations:

** 39 ⅜" (1000mm) - 2 pieces*

** 59 1/16" (1500mm) - 3 pieces*

** 78 ¾" (2000mm) - 4 pieces*

** 98 7/16" (2500mm) - 5 pieces*

** 118 ⅛" (3000mm) - 6 pieces*

II. TECHNICAL SPECIFICATIONS:

- 90 Degree Clamps M3 is made of aluminum.
- This clamp consists of reverse-U body and clamp body which can align two slabs to a perfect 90 degree angle.

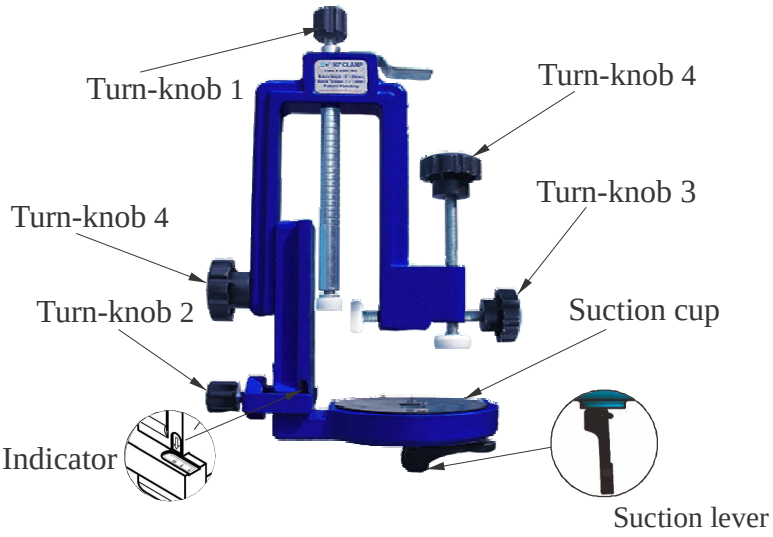

1) Dimensions:

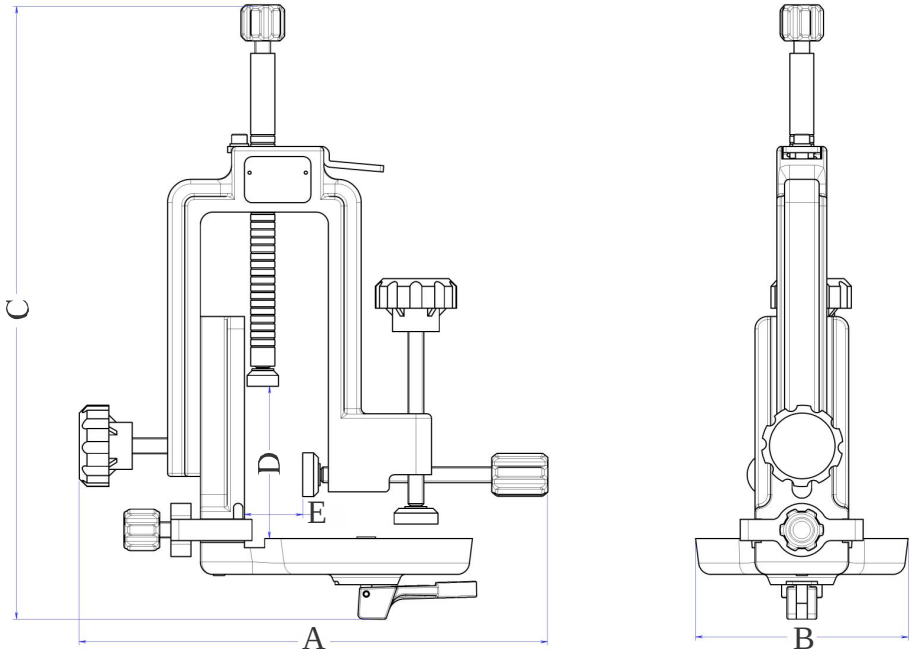

Length (A) inches (mm)	Width (B) inches (mm)	Height (C) inches (mm)	Net Weight/Pair lbs (kg)
9 7⁄16 (240)	5 3⁄8 (136)	13 9⁄16 (345)	13.32 (5.6)

- **Maximum height of slab (D):** 10 1⁄16" (255 mm)
- **Maximum thickness of slab (E):** 1 9⁄16" (40 mm)

2) Spare part list:

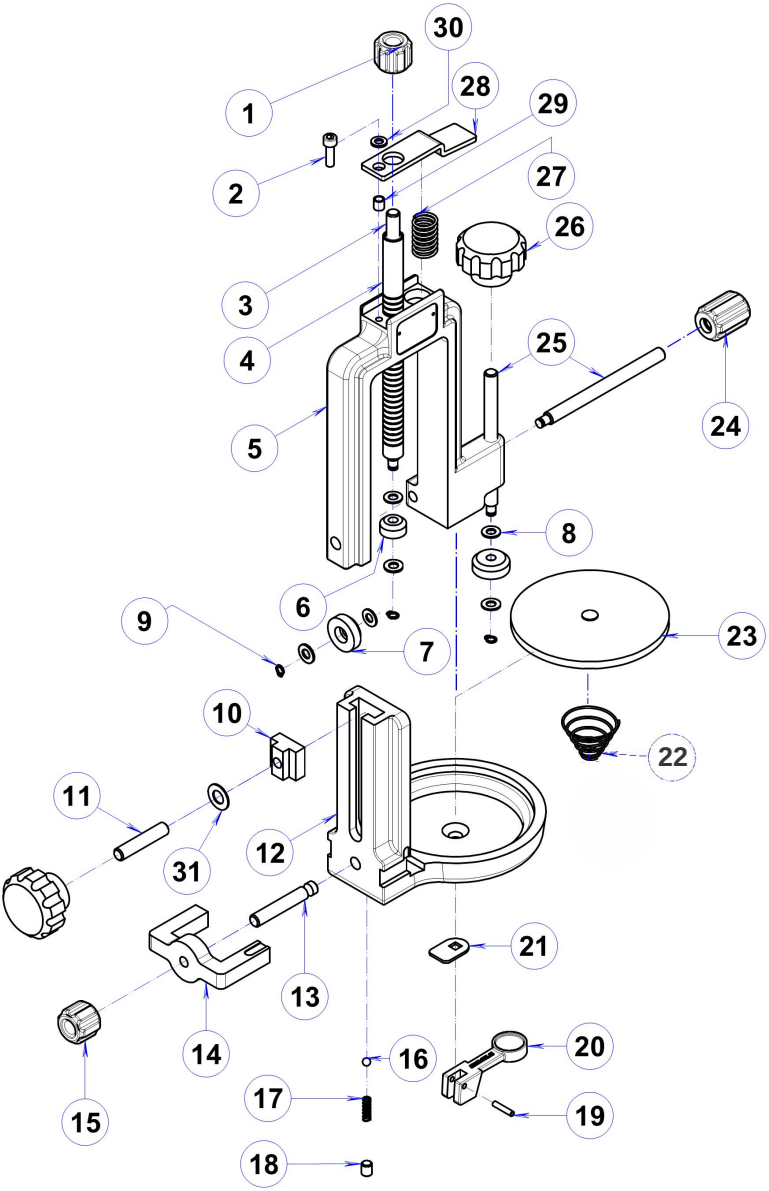

SPARE PARTS LIST

Code	Description	Qty.
A90CM3-01	Turn-knob 1	1
A90CM3-02	Allen bolt M6 x 20	1
A90CM3-03	Rod, threaded 1	1
A90CM3-04	Slide tube	1
A90CM3-05	Reverse U body	1
A90CM3-06	Pusher, plastic 1	1
A90CM3-07	Pusher, plastic 2	2
A90CM3-08	Washer ø7	6
A90CM3-09	Circlip ø7	3
A90CM3-10	Slide base	1
A90CM3-11	Rod, threaded 2	1
A90CM3-12	Clamp body	1
A90CM3-13	Left rod, threaded	1
A90CM3-14	Shape-U limit	1
A90CM3-15	Turn-knob 2	1
A90CM3-16	Steel ball	1
A90CM3-17	Spring 1	1
A90CM3-18	Allen set screw M8 x 10	1
A90CM3-19	Pin, lever	1
A90CM3-20	Suction lever	1
A90CM3-21	Thrust washer	1

Code	Description	Qty.
A90CM3-22	Spring 2	1
A90CM3-23	Suction cup	1
A90CM3-24	Turn-knob 3	1
A90CM3-25	Rod, threaded 3	2
A90CM3-26	Turn-knob 4	2
A90CM3-27	Spring 3	1
A90CM3-28	Stopper	1
A90CM3-29	Spacer	1
A90CM3-30	Washer ø6	1
A90CM3-31	Washer ø10	1

III. INSTRUCTION FOR USE:

1. General Cautions for Operations:

a. Before operation:

- Make sure that Turn-knobs and Suction lever are in good operating conditions.
- Make sure that there are no dust, oil and other debris on the Suction cup as well as on the slab surfaces.
- Use appropriate PPE (Personal Protective Equipment) to protect against injury.

b. During operation:

- Make sure that Suction cup sucks the stone slab tightly.
- Work area must be clean and flat, and avoid locations where vibration exists.
- Follow the steps and instructions in the operation manual.
- For your own safety, follow all the applicable laws and regulations in your region.

c. After operation:

- Maintain Suction cup surface free from any foreign matters to prevent Suction cup from getting out of shape.
- Clean the device thoroughly after each use.
- Store in a well-ventilated place, avoid places with high heat and humidity.

2. Device usage:

Step 1: Measure the dimension “a” being not be beveled at the edge. (Figure 1).

Note: *Skip this step if the finished edges are not beveled.*

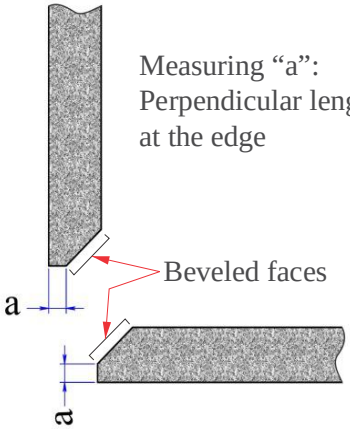

(Figure 1)

Step 2: Rotate the turn-knob 2 clockwise to move the slide adjuster equal to “a” (the red arrow points to the value "a" on the indicator) (Figures 2 and 3).

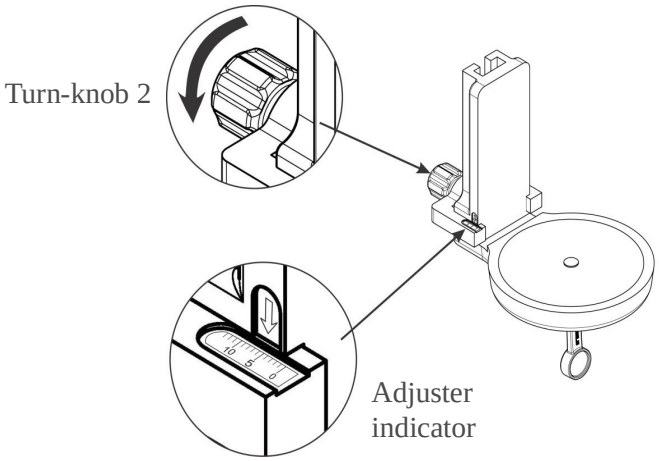

(Figure 2)

Step 3: Installing Clamp to Countertop:
- Confirm the adjuster indicator shows the value of “a”.
- Clean the surface of Suction cup and the Countertop thoroughly.
- Place Clamp A90CM3 to the underside of Countertop to touch the beveled end edge to the tip of Turn-knob 2.
Note: *The number of clamps needed depend on the length of the stone slabs to be joined. (Refer to the Recommendations on page 1.)*
-Turn Suction lever to fix the position of Clamp to Countertop tightly. (Figure 3)

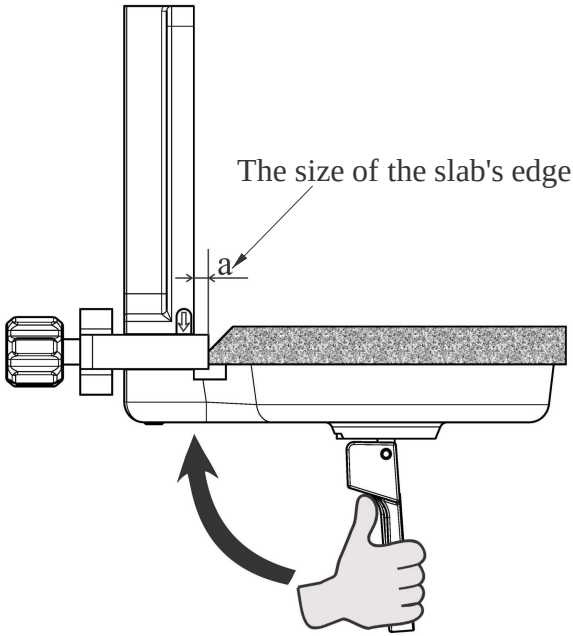

(Figure 3)

Step 4: *Installing Fascia:*

- Rotate the turn-knob 2 anticlockwise indicator reading to 0 in order to provide an exact spacing for inserting Fascia (Figure 4a).
- Put Fascia on Clamp body (Figure 4b).

Note:

- Clean the surface of mitre joint carefully.
- Apply glue on the two Mitre joint faces before installing Fascia.

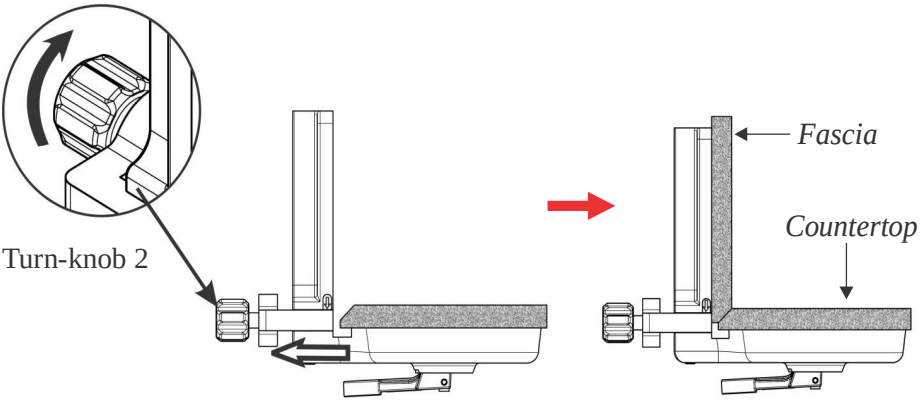

(Figure 4a) *(Figure 4b)*

Step 5: Installing Reverse-U body:

- Installing Reverse-U body on to Suction cup, move Reverse-U body to fit the both faces of Mitre joints perfectly. (Figure 5a and 4b)
- Then tighten the turn-knob 4 to fix the position of Reverse-U body (Figure 5a).

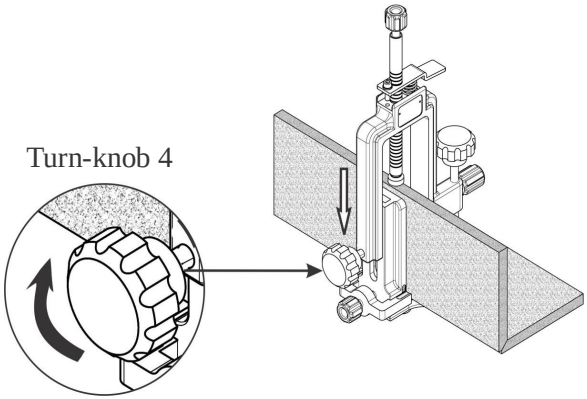

Figure 5a

- Before rotating Turn-knob 1, press Stopper down. Then slide the set of Turn-knob 1 down to touch Fascia at the edge (Figure 5b).
- Turn Turn-knob 1, 3 and 4 in order to hold Fascia and Countertop firmly (Figure 5c).

Note: *Use moderate turning forces to the knobs.*

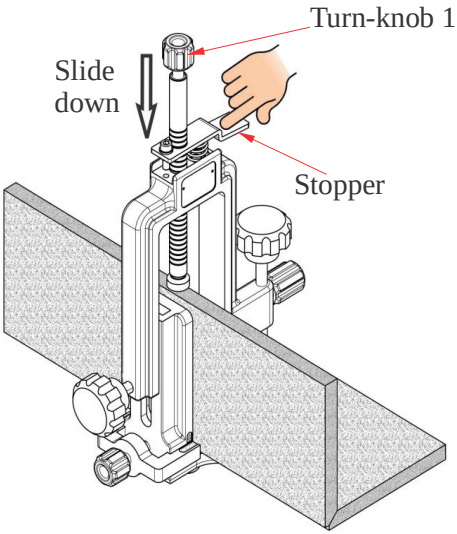

(Figure 5b)

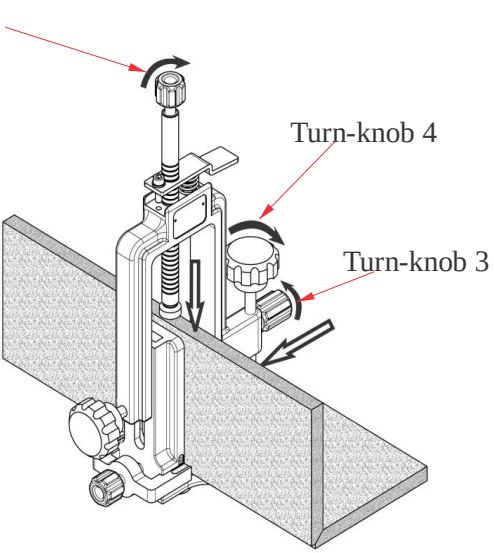

(Figure 5c)

Steps 6: Wait until glue cures out, then release the clamp.

IV. TECHNICAL PROBLEMS AND SOLUTIONS:

Technical problem	Cause	Solution
Suction cup loose suction.	- The suction cup has dust, grease or foreign matters on it. - The suction cup is damaged.	- Clean the Suction cup. - Replace with a new Suction cup.
Turn-knobs are hard to turn.	Threads are rusted, dusted or stripped off.	Apply oil and clean the device and replace the thread of Turn-knob if necessary.
The slide base is jammed or stucked.	Dust buildup.	Apply oil and clean the slide base.
The stopper is hard to manipulate. 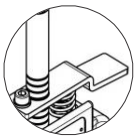	- Dust build-up. - Spring is damaged.	- Clean the stopper. - Replace with a new one if necessary.

V. INSPECTION & MAINTENANCE:

- Schedule periodic maintenance.
- Always keep necessary spare parts on hand for maintenance or repair.
- Regularly check the Suction cup and the Suction lever.
- Always keep the clamps clean and away from grease or liquid.
- Store in a dry and cool place.

VI. WARRANTY:

At the time of delivery, it is necessary to inspect 90 Degree Clamp M3 to make sure that it has not been damaged during shipment. Any claims must be submitted within 8 days from the date of delivery. We provide a one (1) year warranty on the 90 Degree Clamp M3 from the date of purchase.

During warranty period, we will provide the replacement parts at no charge (shipping and handling fees may apply).

Warranty coverage is void if:

- The operator failed to comply with the instructions in the manual.
- The specifications are not followed.
- Damage is due to inadequate maintenance and inspections.
- Damage is due to improper storage and/or usage.
- Repairs were performed by the user without our permission.
- Non-original spare parts were used.

WARRANTY CERTIFICATE

Please read the following terms and conditions carefully.

PERIOD

The warranty starts from the date of purchase and is valid for a period of twelve (12) months.

WARRANTY

This warranty is limited only to providing replacement parts as determined by the Company as defective (excluding worn-outs and consumable parts).

The Company is not responsible for any negligence, abuse, or improper use of the product.

In case the device failed to operate properly within the warranty period, our Customer Support Department will inform you of the appropriate method in dealing with your claim and advise you of your nearest approved service center.

EXCLUSIONS

The warranty does not apply to damages or failures caused by:

Incorrect use, misuse, error in transporting, mishandling improper or lack of regular maintenance.

Use of non-genuine parts/accessories, or of incorrect specs.

THIS MANUAL SHALL BE REVISED WITHOUT PRIOR NOTICE FOR IMPROVEMENT PURPOSES

DO NOT COPY AND/OR QUOTE THE CONTENTS WITHOUT PRIOR WRITTEN CONSENTS.

Copyright:
L20