AUSAVINA
MATERIAL HANDLING SOLUTIONS

AUSAVINA CO., LTD

OPERATION MANUAL

AUSAVINA FALCON LIFTER AUTOMATIC (AFL75A)



AUSAVINA Co., Ltd.
No. 944/1 Nguyen Thi Minh Khai St,
Tan Thang Quarter, Tan Binh Ward,
Di An City, Binh Duong Province, Vietnam
Website: www.ausavina.com
Email: sales@ausavina.com
Tel: (+84) 274 373 9448 - (+84) 274 373 9449
Fax: (+84) 274 373 9447

INDEX

Item		Pages
I	Overview	1
II	Technical Specifications	1
	1) Dimensions	2
	2) Spare Part List	3
III	Instructions for Use	5
	1) Safety Instructions	5
	2) Device usage	7
IV	Appendix	11
V	Technical Problems & Solutions	13
VI	Inspection & Maintenance	14
VII	Warranty	14
	Warranty Certificate	15

Note: Please read this operation manual carefully before using the device.

I.OVERVIEW:

- The Falcon Lifter Automatic AFL75A is designed for clamping and moving stone slabs.
- Opening and Closing mechanism of the clamp plates is fully automatic.
- It is suitable for both natural and artificial stones in various thicknesses ranging from 9⁄16” (15 mm) to 2 15⁄16 ” (75 mm).
- The clamp plates are covered by rubber pads to prevent scratches or damages on the stone slab surfaces during operation and transportation.
- The lifter shall ensure safety for users and increase productivity as well.

II. TECHNICAL SPECIFICATIONS:

- The Falcon Lifter Automatic is mainly made of steel, so it is sturdy and durable in harsh environment and even at strong impact.
- The lifter shall be used by combining with a crane (or with a forklift truck) to clamp, to lift, and to transport stone slabs.
- The lifter shall be hooked to the specialized swivel shackle, which makes a stone slab possible to rotate 360 easily.

1) Dimensions:

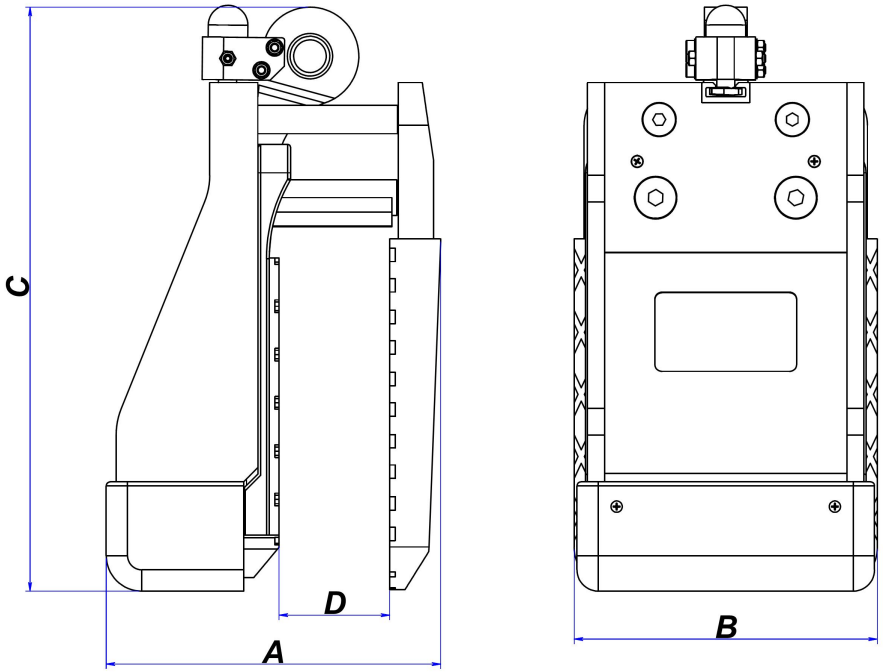

Length (A) inches (mm)	Width (B) inches (mm)	Height (C) inches (mm)
9 ¼ (235)	8 7⁄16 (214)	16 ¾ (425)

Grip Range (D) inches (mm)	W.L.L* lbs (kg)
9⁄16 ~ 2 15⁄16 (15 ~ 75)	2200 (1000)

** W.L.L: Work load limit*

2) Spare Part List:

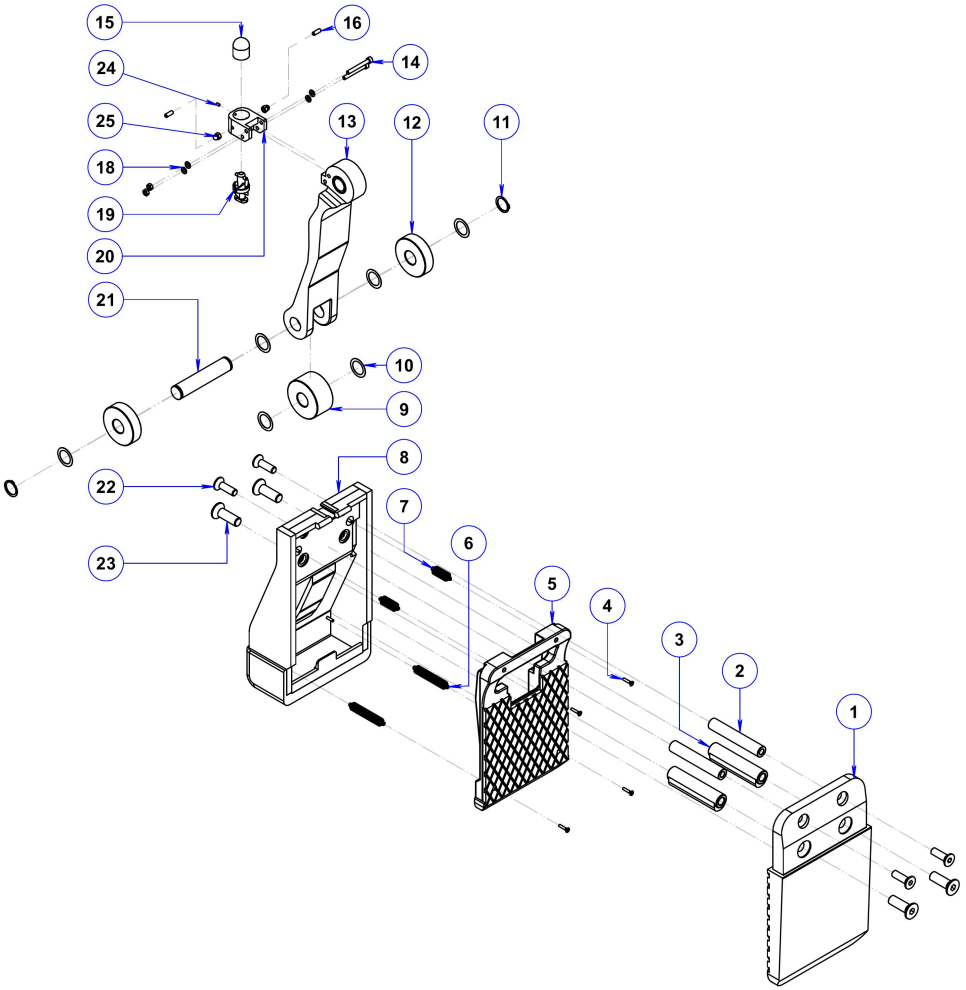

CODE	DESCRIPTION	QTY.
AFL75A-01	Clamp plate, fixed	1
AFL75A-02	Top shaft	2
AFL75A-03	Bottom shaft	2
AFL75A-04	Screw M4 x 20	8

CODE	DESCRIPTION	QTY.
AFL75A-05	Clamp plate	1
AFL75A-06	Bottom extension spring	2
AFL75A-07	Top extension spring	2
AFL75A-08	Main body	1
AFL75A-09	Roller 1	1
AFL75A-10	Brass washer ø25	6
AFL75A-11	Circlip ø25	2
AFL75A-12	Roller 2	2
AFL75A-13	Lifting pin	1
AFL75A-14	Allen bolt M6 x 50	2
AFL75A-15	Cover	1
AFL75A-16	Allen set screw M6 x 16	2
AFL75A-17	Lock nut M6	2
AFL75A-18	Washer ø6	4
AFL75A-19	Automatic locking latch	1
AFL75A-20	Base, Automatic	1
AFL75A-21	Shaft, roller	1
AFL75A-22	Allen bolt countersunk M12 x 40	4
AFL75A-23	Allen bolt countersunk M16 x 50	4
AFL75A-24	Allen set screw M4 x 6	1
AFL75A-25	Cap nut M6	2

III. INSTRUCTIONS FOR USE:

III.1. Safety Instructions:

WARNING: Before using your Falcon Lifter Automatic, please confirm the surfaces of the slab to be lifted are flat, smooth, and free from dust, oil, or any kind of such harmful substances which allow slipping for lifting.

a) For the Falcon Lifter Automatic:

Cautions:

- Follow all the safety regulations and applicable laws in your country for the operations.
- It is strongly recommended that only employees who are highly trained or experienced are allowed to operate this device.
- Lift up the slab slowly. If the slab is not balanced, lower the lifter, adjust the alignment and lift again.
- Before lifting any product, the Swivel Shackle should be carefully inspected for its wear, any damage, cotter/snap pins loosening / lost, or nut loosening. If the Shackle gets any damage, it should not be used until repaired or replaced.

Warnings:

- Inspect the lifter carefully and thoroughly. If the rubber pads of clamp plates are worn-out or damaged, do not use, replace with new pads.
- This Falcon Lifter Automatic is designed for lifting slabs with thicknesses ranging from 9⁄16" to 2 15⁄16 (15 to 75 mm). Determine the weight of the slab to be lifted. Do not exceed the Work Load Limit (W.L.L.) refer to page 2.
- All employees must stand within the safe area while slabs are being lifted or moved.
- Make sure to check the rubber pads are free from dirt. Grease and other substances that may reduce their effectiveness. Clean the rubber pad surfaces by water. Then wait till dry and use the device after.

- Do not lift wet slabs. The grip depends on friction. Lifting wet slab may cause the rubber pads to lose their grips.
- No more than one piece should be lifted at any time.
- Position the lifter at the center of the slab to be lifted, so that the load is balanced.
- Make sure that the slab is inserted to the full depth into the opening of the lifter (refer to Appendix at page 11).

***b) General Safety Instructions*:**

Cautions:

- In order to protect from any accident, it is important to follow safety rules and regulations.
- Read the operation manual carefully before using.
- Make sure that the operation manual is always available beside the place where the lifter is used.
- Give permissions to operate the device only to persons who are well-trained and competent to work.
- Use appropriate PPE (Personal Protective Equipment) such as helmet, gloves, and safety boots, etc.
- Ensure and confirm each time before using that the Falcon Lifter Automatic has No Damage mechanically and functionally and is ready to be operated safely in the safe working conditions.
- Repairs and checks are to be made only by qualified persons.
- If any part worn-out, replace with a new one or contact with the manufacturer.
- Before operating this device, check the swivel shackle that nuts are not loosened and cotter and snap pins are all in order. Be aware that Swivel Shackles can be worn-out time to time. Periodical lubrication can reduce wear. If worn-out, replace with a new one.
- Clean the device thoroughly after using.
- Store the lifter in a well-ventilated place, avoid places with high heat or humidity

Warnings:

- Never leave a lifted load unsupervised.
- Never allow yourself or anybody to go under the lifted slab.
- Be sure to check the lifter and its accessories duly and periodically, there should be no damage or loosening of fasteners or any irregular unfunctional sound, also before using reconfirm those points once again, then use the lifter for your safe operations.

c) Automatic locking latch system:

- Automatic locking latch system consists of a cam wheel which could be rotated when the device was lifted up to clamp the stone slab. Make sure that no dust is inside the automatic locking latch, regularly check and lubricate oil to ensure the proper operation.
- Please mind that this Automatic Locking System engages Lifting pin with Main body to avoid Clamp plates to close for clamping. In this condition, when lifting the Lifter, the Clamp plates are free from clamping, so that the Lifter can be released from the slab lifted before and to be moved to another.

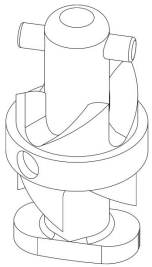

Automatic locking latch

III.2. Device Usage:

Preliminary Safety Checks:
"Competent Person" shall check the following before each use.

WARNING:

Check the following before and after operations:

- The Falcon Lifter Automatic is correctly installed/hung in the right manner described in this paragraph and to be operated in safe working conditions.
- The swivel shackle is correctly and securely installed and tightened accordingly.

Step 1: Hook the Falcon Lifter Automatic to a forklift boom or to a crane hook (figure 1.1).

Warning: Place the device at the safe place, then crane hook or Forklift boom has to approach the lifter for installation. Avoid lifting the lifter by hands in order to avoid dropping the lifter.

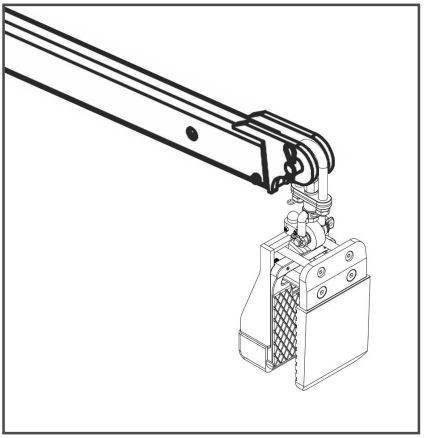

Figure 1.1

Step 2: Use slab wedges* to make a gap between the outer slab and the inner slab (figure 2.1).

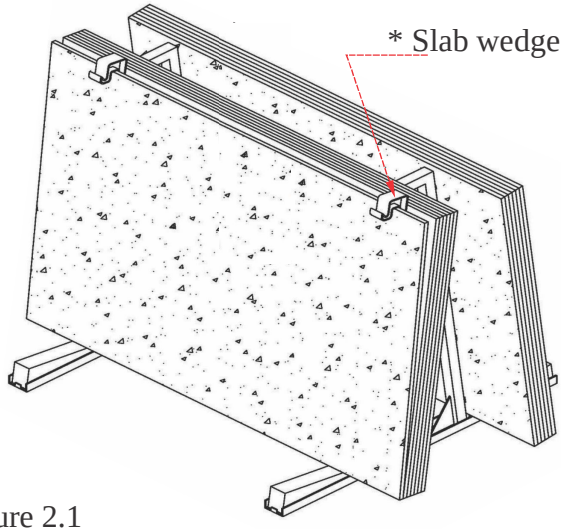

Figure 2.1

Step 3: Clamp the slab.

Lowering the lifter to be perpendicular to the slab and place at the center of the slab (figure 3.1).

Note: Position the lifter securely at the center of the slab so that the load is balanced. Make sure that the slab is inserted in full depth to the opening of the lifter (Refer to page 11).

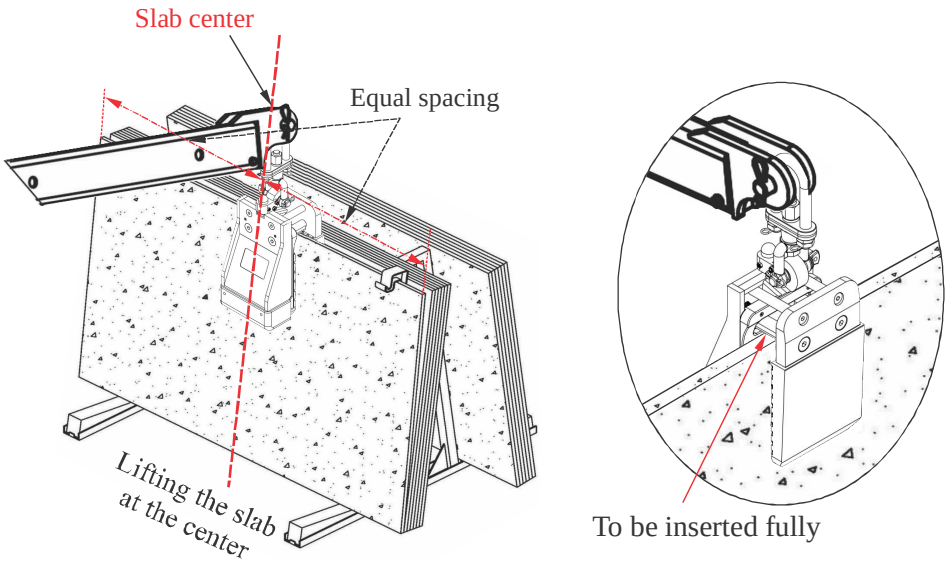

Figure 3.1

- Lift the stone slab slowly to ensure the weight balance. During lifting, the locking latch system will release the clamp plates to tightly grip the stone slab. Then, the stone slab is ready to move out of the stand or rack.

Note: If the clamp plates do not grip the slab firmly and securely when lifting the lifter, lower the lifter, recheck the status, and lift it up again.

<u>Step 4:</u> Move the stone slab to the desired location (Figure 4.1).
Warning: All the people who are not obligated must stand within the safety area while slab is being lifted or moved. Do not allow yourself or anybody to go under the lifted slab.

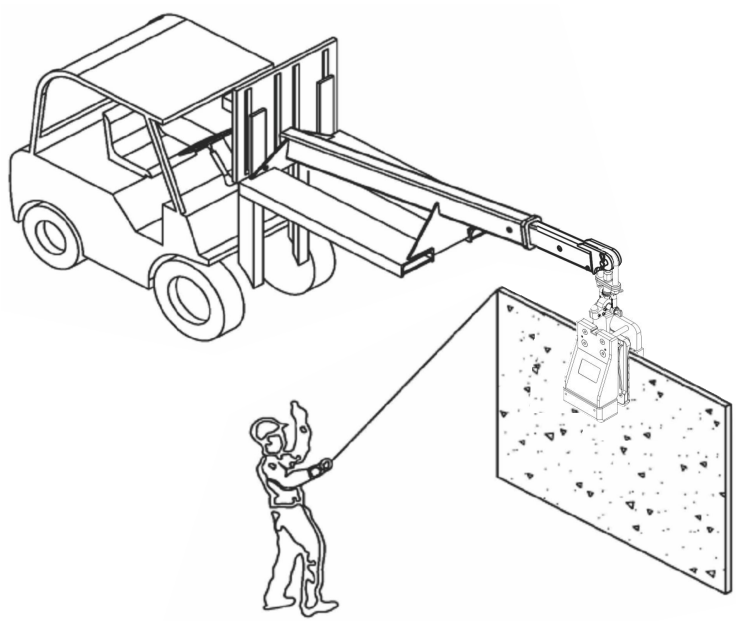

Figure 4.1

<u>Step 5:</u> Remove the lifter out of the stone slab.
Lower the lifter slowly until the lifter and the swivel shackle are relaxed, the locking latch will lock automatically to keep the clamp plates open to release the slab. Then move the lifter away from the slab.

Cautions:

- Before lowering the slab, make sure there are no obstacles to interfere when lowering the slab to a stand or rack.
- If the lifter still grips the stone slab, do all the steps again, move the lifter up and down to unlock the locking latch.

IV. APPENDIX:

1. Correct and incorrect methods of clamping slab:

WARNING

- Do not exceed W.L.L (Work Load Limit, page 2).
- Slab thickness must be within G.R. (Grip Range, page 2).
- Inspect and replace the Swivel Shackle as needed due to ware.

Examples: Correct and incorrect methods of clamping slab.

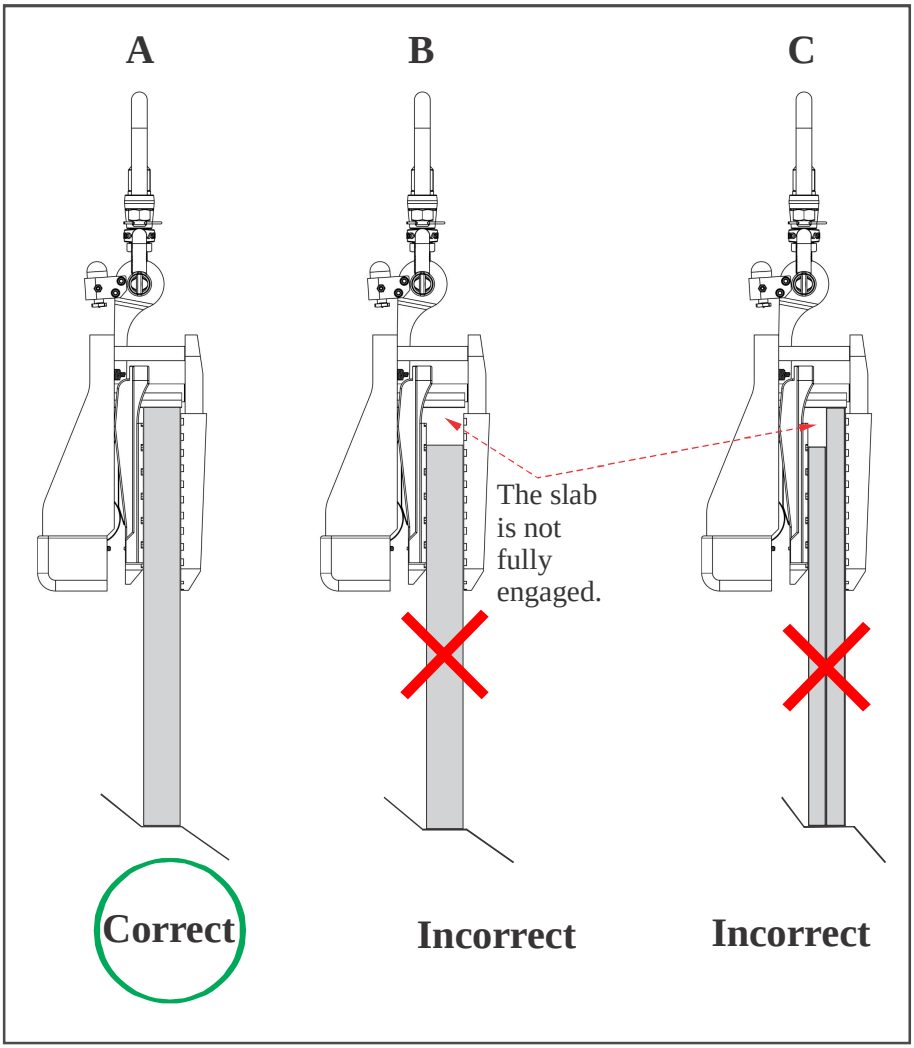

2. SWIVEL SHACKLE

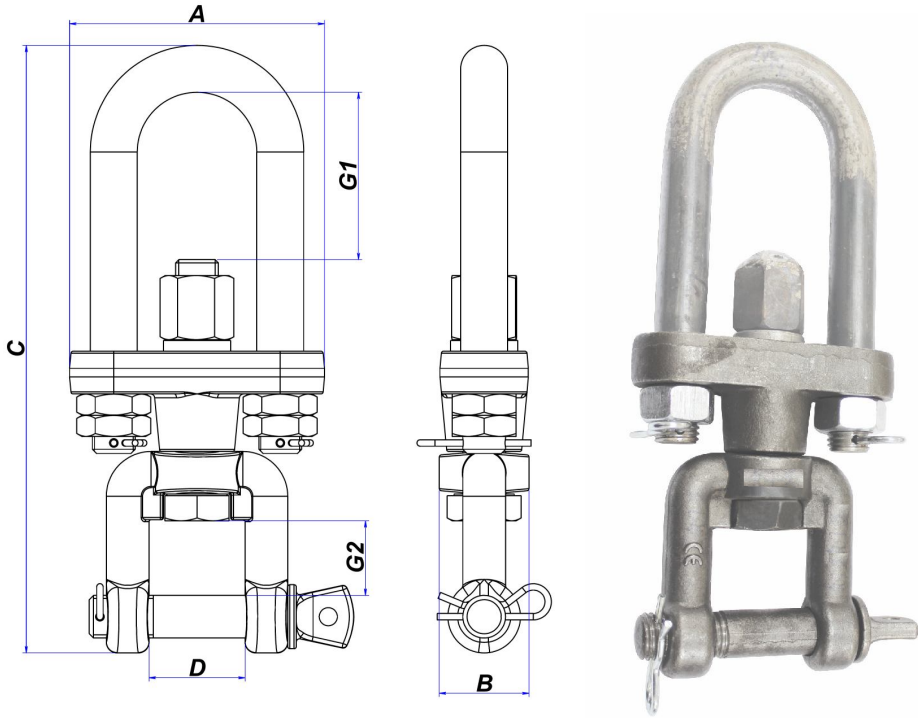

Length (A) inches (mm)	Width (B) inches (mm)	Height (C) inches (mm)	Distance (D) inches (mm)	Gap (G1) inches (mm)	Gap (G2) inches (mm)	Net Weight lbs (kg)
4 ⅝ (118)	1 ⅝ (42)	11 ¼ (285)	1 ¾ (45)	3 1⁄16 (78)	1 ⅜ (35)	7.3 (3.3)

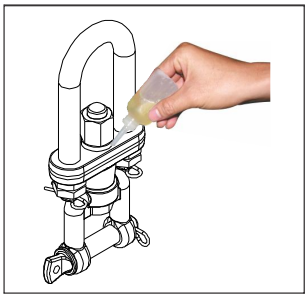

- Step 1: Check the wear of friction part.

- Step 2: Lubricate Oil into friction surface once a week.

Note: It is not recommended to use the swivel shackle for other purposes to avoid any unnecessary damage.

V. TECHNICAL PROBLEMS & SOLUTIONS:

Technical problem	Cause	Solution	Image
The lifting pin does not return to the original position.	Lifting pin is stuck or the spring gets distorted.	Clean the shafts, bearings or replace with (a) new spring(s).	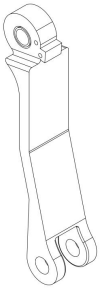
Automatic locking latch does not operate	Dust and/ or rust	Lubricate, clean the locking latch	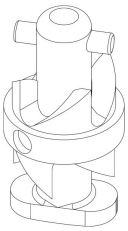

VI. INSPECTION & MAINTENANCE:

- Schedule periodic maintenance of the lifter, especially the rubber pad of clamp plates, automatic locking latch and rollers.
- Reserve expendable and/or necessary spare parts for maintenance or repair.
- Regularly check the tightening conditions of all the bolts and nuts.
- Always keep the lifter clean and away from grease or other substances as they may reduce the effectiveness of the rubber pads and cause them lose their grip.
- Store the lifter in a well-ventilated place, avoid places with high heat or humidity.

VII. WARRANTY:

At the time of delivery, it is necessary to inspect the Falcon Lifter Automatic to make sure that it has not been damaged during shipment. Any claims must be submitted within 8 days from the date of delivery. We provide a one (1) year warranty on the Falcon Lifter Automatic from the date of purchase.

During warranty period, we will provide the replacement parts at no charge (shipping and handling fees may apply).

Warranty coverage is void if:

- The operator failed to comply with the instructions in the manual.
- The specifications are not followed.
- Damage is due to inadequate maintenance and inspections.
- Damage is due to improper storage and/or usage.
- Repairs were performed by the user without our permission.
- Non-original spare part was used.

WARRANTY CERTIFICATE

You are kindly requested to read the following carefully.

PERIOD

The warranty starts from the date of purchase (date on distributors invoice).

Warranty is valid for a period of twelve (12) months.

WARRANTY

This warranty is limited only to provide replacements of the parts recognized by the Company as defective (excluding worn-outs and consumables.)

The Company is not responsible for any misuse or abuse of the product after purchase and/or caused by negligence from the content of this manual.

In case of failure using the device, our Customer Support Department will inform you of the appropriate methods of dealing with your claim and advise you of your nearest approved service center.

EXCLUSIONS

Warranty does not apply for damages or failures caused by:

Incorrect use by users for misuse or for error in transportation, in handling or in maintenance.

Use of non-genuine parts/accessories, or of incorrect specs.

THIS MANUAL SHALL BE REVISED WITHOUT PRIOR NOTICE FOR IMPROVEMENT PURPOSES

DO NOT COPY AND/OR QUOTE THE CONTENTS WITHOUT PRIOR WRITTEN CONSENTS.

Copyright:
E20