AUSAVINA
MATERIAL HANDLING SOLUTIONS

CE

AUSAVINA CO., LTD

OPERATION MANUAL

AUSAVINA LITTLE GIANT LIFTER AUTOMATIC (ALG50A)



AUSAVINA CO., LTD
No. 944/1 Nguyen Thi Minh Khai St.,
Tan Thang Quarter, Tan Binh Ward,
Di An Town, Binh Duong Province, Vietnam
Website: www.ausavina.com
Email: sales@ausavina.com
Tel : (+84) 274 373 9448 - (+84) 274 373 9449
Fax : (+84) 274 373 9447

APPLICABLE MODEL
of this LITTLE GIANT LIFTER AUTOMATIC:

ALG50A

INDEX

Item		Pages
I	Overview.....	1
II	Technical Specifications.....	1
	1) Dimensions.....	2
	2) Spare part list.....	3
III	Instructions for use.....	6
	1) Safety Instructions.....	6
	2) Device usage.....	9
IV	Appendix.....	13
V	Technical problems & Solutions.....	15
VI	Inspection & Maintenance.....	15
VII	Warranty.....	16
	Warranty Certificate.....	17

Note: Please read this Operation Manual carefully before using the device.

I. OVERVIEW:

- The Little Giant Lifter Automatic ALG50A is designed to lift and move flat and heavier items like stone slabs etc. at workshops, ware houses, work sites, etc.
- Clamp plates Opening and Closing mechanism is fully automatic. Each time you lift up and lift down, the installed Automatic locking latch will lock and release the clamping mechanism.
- It is suitable for both natural and artificial stones, or other flat materials in various thicknesses ranging from ⅜" (10mm) to $1\frac{15}{16}$" (50 mm).
- The clamp plates are covered by rubber pads to prevent from scratches or damages on the stone slab surfaces during operation and transportation.
-The lifter shall ensure safety for users and increase productivity as well.

II. TECHNICAL SPECIFICATIONS:

- The Little Giant Lifter Automatic is mainly made of aluminum so it is lightweight and durable.
- The lifter shall be used by combining with a crane (or with a forklift truck) to clamp, to lift, and to transport stone slabs.
- The lifter comes with a specialized swivel shackle, which makes the lifter and the material to rotate 360^0 easily (Refer to page 14.)

1) Dimensions:

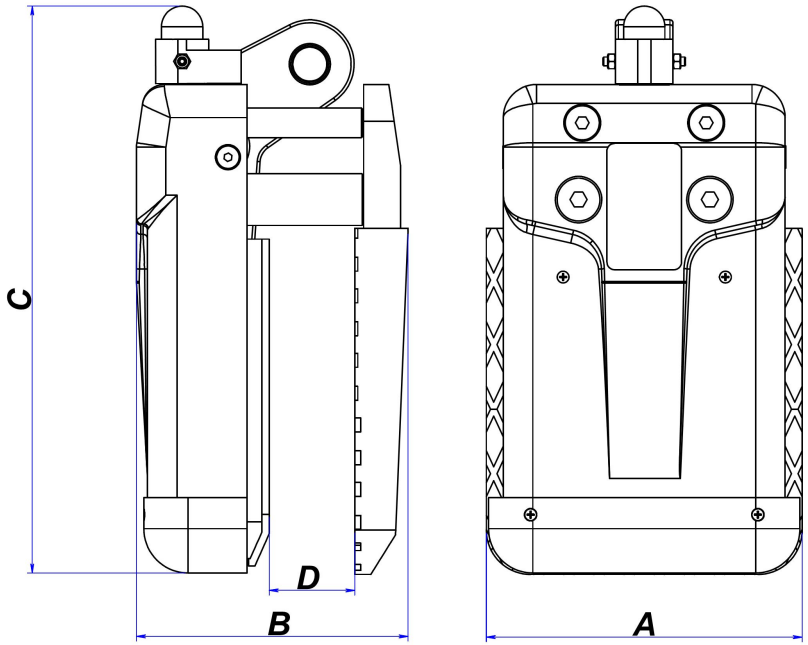

Length (A) inches (mm)	Width (B) inches (mm)	Height (C) inches (mm)
8 7⁄16 (214)	7 ¼ (184)	15 ⅛ (385)

Grip Range (D) inches (mm)	Net weight lbs (kg)	WLL* lbs (kg)
⅜ ~ 1 15⁄16 (10 ~ 50)	51.4 (23.2)	2860 (1300)

* *WLL: Work load limit*

2) SPARE PART LIST:

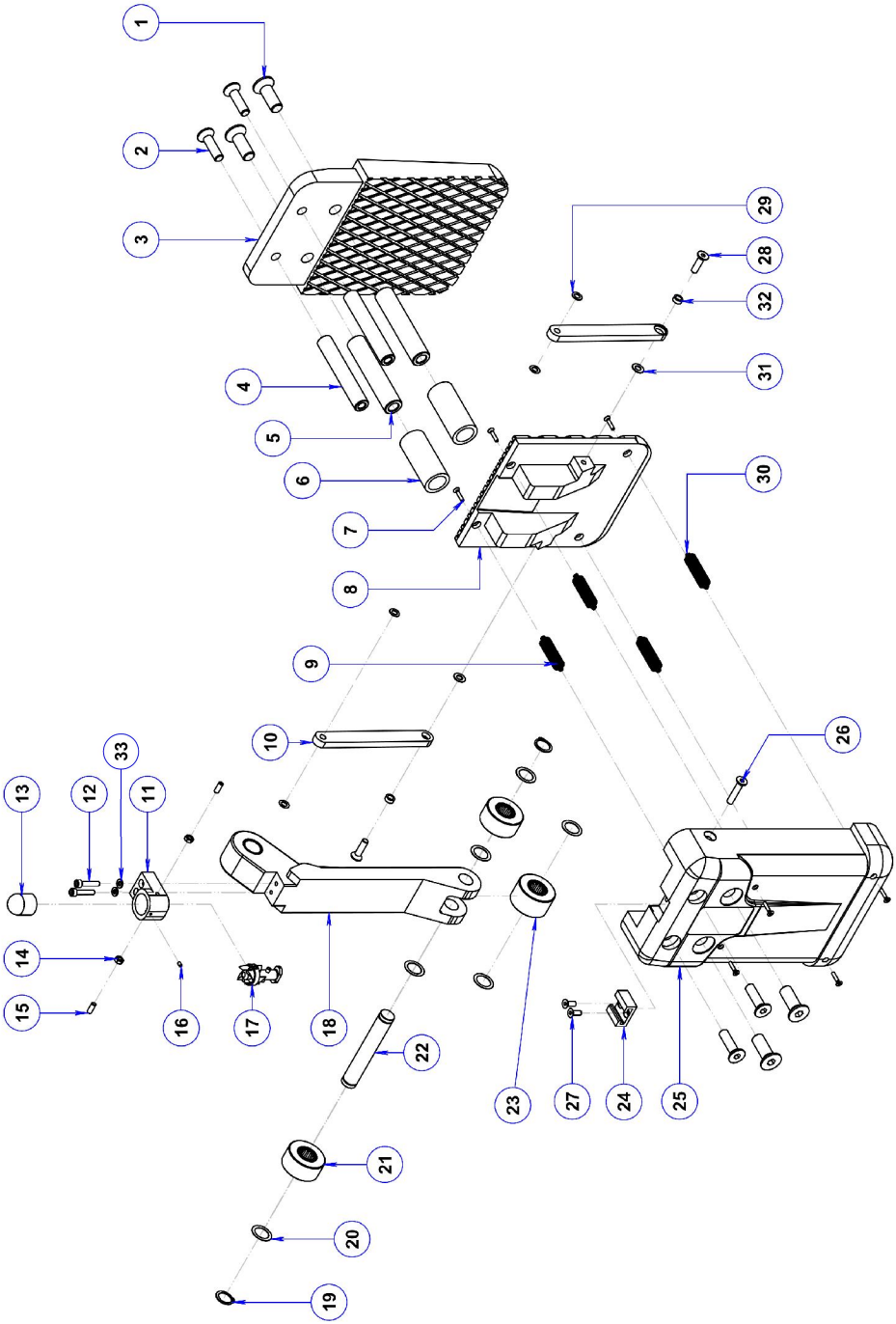

SPARE PART LIST

POS.	DESCRIPTION	CODE	QTY.
1	Allen bolt countersunk M16 x 50	ALG50A-01	4
2	Allen bolt countersunk M12 x 40	ALG50A-02	4
3	Clamp back plate	ALG50A-03	1
4	Top pin	ALG50A-04	2
5	Bottom pin	ALG50A-05	2
6	Rubber tube	ALG50A-06	2
7	Screw M4 x 20	ALG50A-07	8
8	Clamp center plate	ALG50A-08	1
9	Top extension spring	ALG50A-09	2
10	Linker	ALG50A-10	2
11	Base, auto lock	ALG50A-11	1
12	Allen bolt M6 x 35	ALG50A-12	2
13	Cover	ALG50A-13	1
14	Cap nut M6	ALG50A-14	2
15	Allen set screw M6 x 16	ALG50A-15	2
16	Allen set screw M4 x 6	ALG50A-16	1
17	Automatic locking latch	ALG50A-17	1
18	Lifting pin	ALG50A-18	1
19	Circlip ø20	ALG50A-19	2

POS.	DESCRIPTION	CODE	QTY.
20	Brass washer ø20	ALG50A-20	6
21	Outer roller	ALG50A-21	2
22	Shaft of roller	ALG50A-22	1
23	Inner roller	ALG50A-23	1
24	Receptacle (automatic lock)	ALG50A-24	1
25	Main housing	ALG50A-25	1
26	Allen bolt countersunk M8 x 40	ALG50A-26	2
27	Allen bolt countersunk M6 x 20	ALG50A-27	2
28	Allen bolt countersunk M8 x 30	ALG50A-28	2
29	Aluminum washer ø8	ALG50A-29	4
30	Bottom extension spring	ALG50A-30	2
31	Washer ø8	ALG50A-31	2
32	Spacer	ALG50A-32	2
33	Spring washer ø6	ALG50A-33	2

III. INSTRUCTIONS FOR USE:

1) Safety Instructions:

WARNING: Before using your Little Giant Lifter Automatic, please confirm the surfaces of the slab to be lifted are flat, smooth, and free from dust, oil, or any kind of such harmful substances which allow slipping for lifting.

a) For the Little Giant Lifter Automatic:

Cautions:

- Carefully consider and follow all the safety regulations and applicable laws in your country for the operations.
- It is strongly recommended that only employees who are highly trained or experienced are allowed to operate this device. Safety rules and regulations must be strictly respected and followed.
- Lift up the slab slowly. If the slab is not balanced, lower the lifter, adjust the alignment and lift again.
- Before lifting any product, the Swivel Shackle should be carefully inspected for its wear, any damage, cotter/snap pins loosening / lost, or nut loosening. If the Shackle gets any damage, it should not be used until repaired or replaced.

WARNINGS:

- Inspect the lifter carefully and thoroughly. If the rubber pads of clamp plates are worn-out or damaged, do not use, replace with new pads.
- This Little Giant Lifter Automatic is designed for lifting slabs ranging from ⅜" to 1 15⁄16" (10 to 50 mm). Determine the weight of the slab to be lifted. Do not exceed the WLL (Work Load Limit) shown on page 2.
- All employees must stand within safe area while slabs are being lifted or moved.

- Make sure to check the rubber pads are free from dirt. Grease and other substances that may reduce their effectiveness. Clean the rubber pad surfaces by water. Then wait till dry and use the device after.
- Do not lift wet slabs. The grip depends on friction. Lifting wet slab may cause the rubber pads to lose their grips.
- No more than one piece should be lifted at any time.
- Position the lifter at the center of the slab to be lifted, so that the load is balanced.
- Make sure that the slab is inserted to the full depth into the opening of the lifter (Figure available at page 13).

b) General Safety Instructions:

Cautions:

- In order to protect from any accident, it is important to follow safety rules and regulations.
- Read the operation manual carefully before using.
- Make sure that the operation manual is always available beside the place where the lifter is used.
- Give permissions to operate the Little Giant Lifter Automatic only to persons who are well-trained and competent to work.
- Use appropriate PPE (Personal Protective Equipment) such as helmet, gloves, and safety boots, etc.
- Ensure and confirm each time before using the Little Giant Lifter Automatic has No Damage mechanically and functionally and is ready to be operated safely in the safe working conditions.
- Repairs and checks are to be made only by qualified persons.

- If any part worn-out, replace with a new one or contact the manufacturer.
- Before operating this device, check the swivel shackle that nuts are not loosened and cotter and snap pins are all in order. Be aware that Swivel Shackles can be worn-out time to time. Periodical lubrication can reduce wear. If worn-out, replace with a new one.
- Clean the device thoroughly after using.
- Store the lifter in a well-ventilated place, avoid places with high heat or humidity.

Warnings:

- Never leave a lifted load unsupervised.
- Never allow yourself or anybody to go under the lifted slab.
- Be sure to check the lifter and its accessories duly and periodically, that there should be no damage or loosening of fasteners or any irregular unfunctional sound, also before using reconfirm those points once again, then use the lifter for your safe operations.

c) Automatic locking latch system:

- Automatic locking latch system consists of a cam wheel which could be rotated when the device was lifted up to clamp the stone slab.
- Please mind that this Automatic Locking System engages Lifting pin with Main body to avoid Clamp plates to close for clamping.
- In this condition, when lifting the Lifter, the Clamp plates are free from clamping, so that the Lifter can be released from the slab lifted before and to be moved to another.
- Make sure that no dust is inside the automatic locking latch, regularly check and lubricate oil to ensure the proper operation.

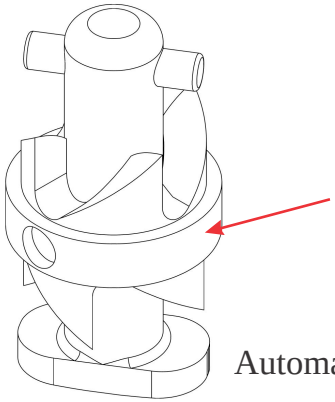

2) Device usage:

Preliminary Safety Checks:

"Competent Person" shall check the following before each use.

WARNING:

Check the following before and after operations:

- The Little Giant Lifter Automatic is correctly installed/hung in the right manner described in this paragraph and to be operated in safe working conditions.
- The swivel shackle is correctly and securely installed and tightened accordingly.

Step 1: Hook the Little Giant Lifter Automatic to a forklift boom or to a crane hook (figure 1.1).

Warning: Place the device at a safe place, then crane hook or Forklift boom has to approach the lifter for installation. Avoid lifting the lifter by hands in order to avoid dropping the lifter unintentionally.

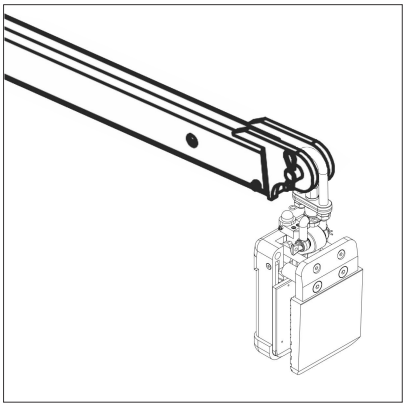

Figure 1.1

Step 2: Use slab wedges* to make a gap between the outer slab and the inner slab (figure 2.1).

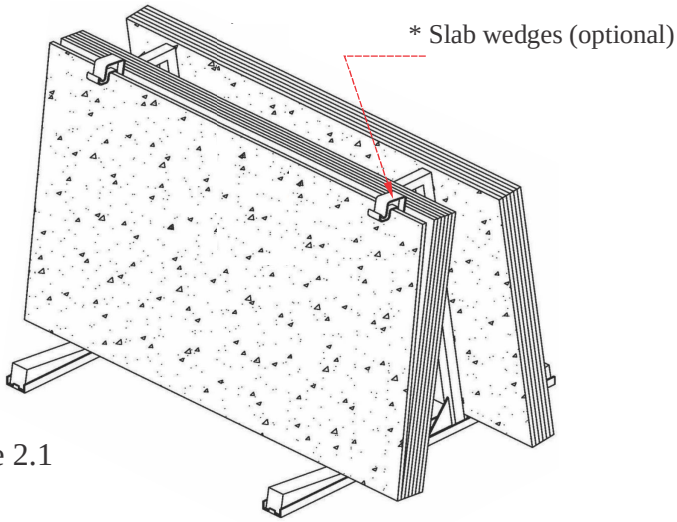

Figure 2.1

Step 3: Clamp the slab:

- Lowering the lifter to be perpendicular to the slab and place at the center of the slab. (Figure 3.1)

Note: Position the lifter securely at the center of the slab so that the load is balanced. Make sure that the slab is inserted in full depth to the opening of the lifter (Refer the Appendix, page 13)

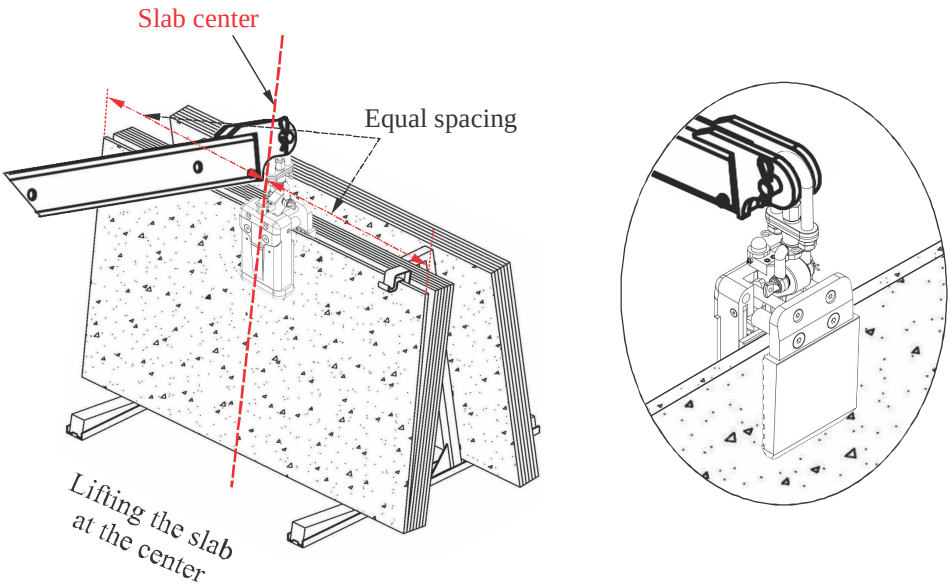

Figure 3.1

- Lift the stone slab slowly to ensure the weight balance. During lifting, the automatic locking latch system allows the Lifting pin to keep clamping plates closed to grip the stone slab tightly. Then, the system releases the stone slab when the stone slab touches the ground.

Note: If the clamp plates do not grip the slab firmly and securely when lifting, lower the lifter, recheck the status, and lift it up again.

Step 4: Move the stone slab to the desired location (Figure 6.1).

Warning: All the people who are not obligated must stand within safety area while slab is being lifted or moved. Do not allow yourself or anybody to go under the lifted slab.

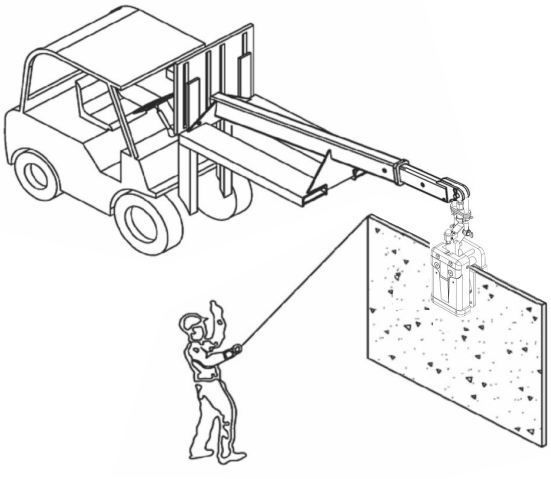

Clear the area for safe and firm operation

Figure 4.1

Step 5: Remove the lifter out of the stone slab.

Lower the lifter slowly until the lifter and swivel shackle are disengaged, the locking latch will lock the Lifting pin to the Main housing automatically then the clamp plates are remained open to release the slab. Then move the lifter away from the slab.

Cautions:

- Before lowering the slab to the stand or rack, make sure that there are no obstacles to interfere.

- If the lifter still grips the stone slab, do all the steps again by moving up and down to unlock the locking latch.

V. APPENDIX:

1) Correct and incorrect methods of clamping slab:

WARNING

- Do not exceed W.L.L (Work Load Limit, page 2).
- Slab thickness must be within G.R. (Grip Range, page 2).
- Inspect and replace the Swivel Shackle as needed due to ware.

Examples: Correct and incorrect methods of clamping slab.

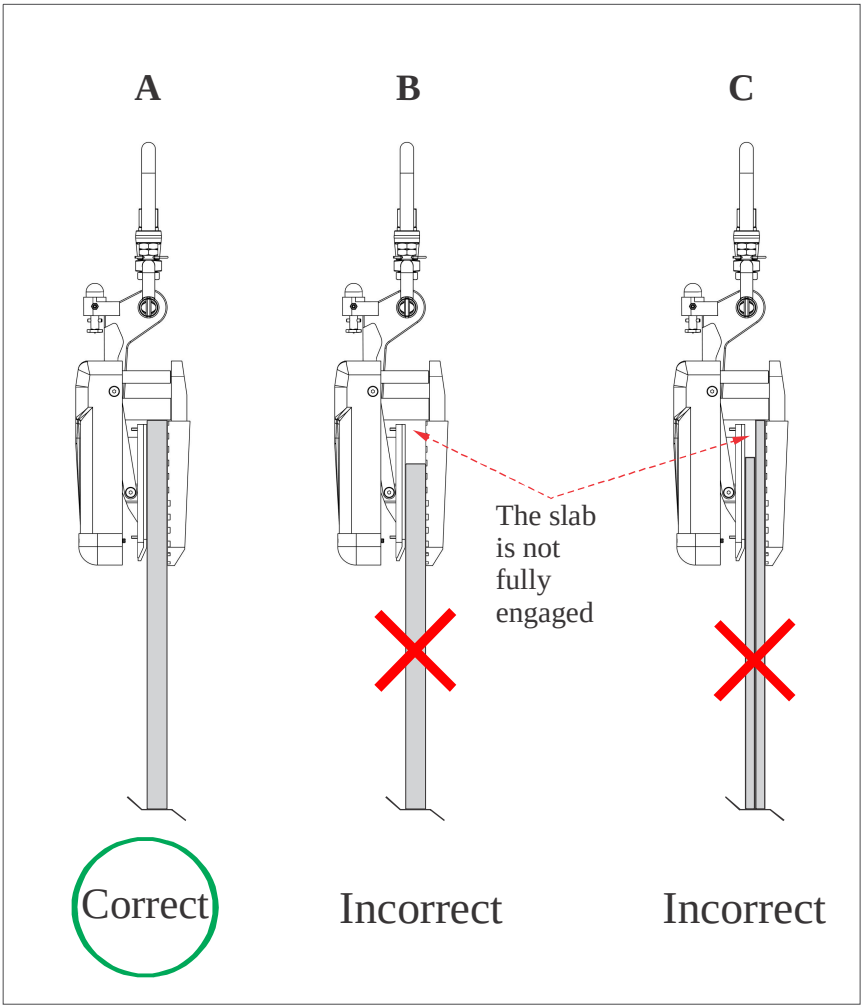

2) SWIVEL SHACKLE:

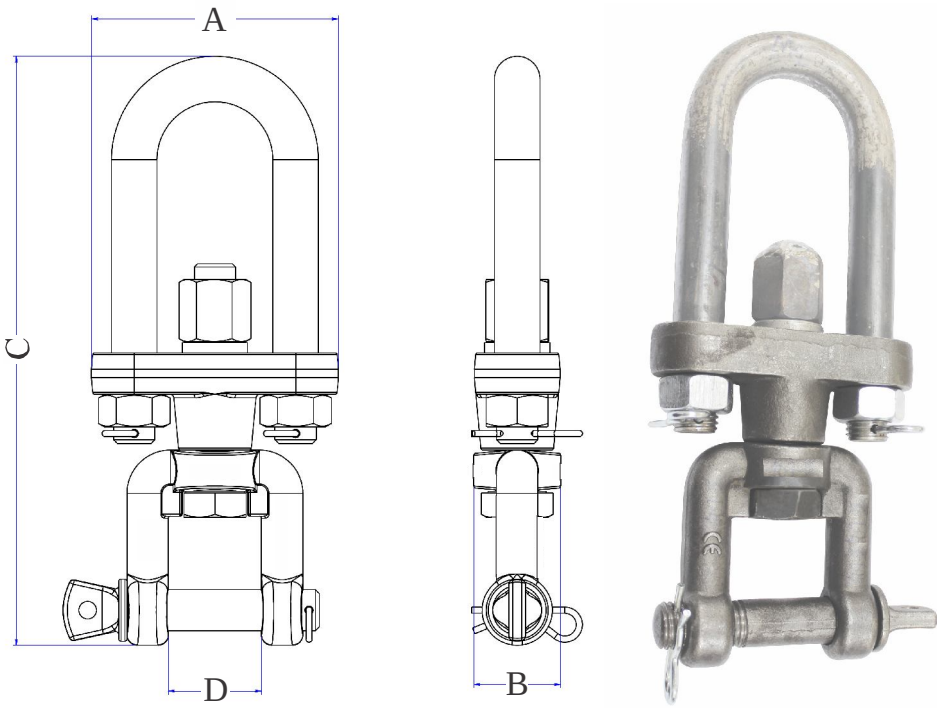

Length (A) inch (mm)	Width (B) inch (mm)	Height (C) inch (mm)	Grip Range (D) inch (mm)	Net weight lbs (kg)
5 ¼ (133)	1 ⅝ (42)	11 ¼ (286)	1 ¾ (45)	7.3 (3.3)

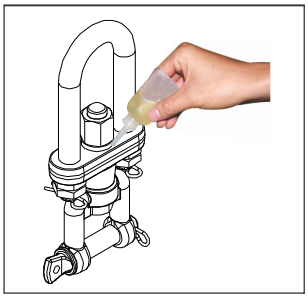

- Step1: Check the wear of friction part.

- Step 2: Lubricate Oil into friction surface once a week.

Note: It is not recommended to use the swivel shackle for other purposes to avoid any unnecessary damage.

V. TECHNICAL PROBLEMS & SOLUTIONS:

Technical Problems	Cause	Solution	Image
Automatic locking latch does not operate	Dust and/or Rust	Lubricate, clean the locking latch	
The Lifting pin does not return to the original position	Lifting pin is stuck, or the tension spring gets distorted or dust/ foreign material is disturbing	Clean the shafts, bearings or replace with (a) new spring (s)	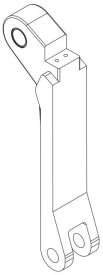

VI. INSPECTION & MAINTENANCE:

- Schedule periodic maintenance for the lifter, especially for the rubber pads of clamp plates, and automatic locking latch.
- Reserve expendable and/or necessary spare parts for maintenance or repair.
- Regularly check the tightening conditions of all the bolts and nuts.
- Always keep the lifter clean and away from grease or other substances as they may reduce the effectiveness of the rubber pads and cause them lose their grip.
- Store the lifter in a well-ventilated place, avoid places with high heat or humidity.

VII. WARRANTY:

At the time of delivery, it is necessary to inspect the Little Giant Lifter Automatic to make sure that it has not been damaged during shipment. Any claims must be submitted within 8 days from the date of delivery. We provide a one (1) year warranty on the Little Giant Lifter Automatic from the date of purchase.

During warranty period, we will provide the replacement parts at no charge (shipping and handling fees may apply).

Warranty coverage is void if:

- The operator failed to comply with the instructions in the manual.
- The specifications are not followed.
- Damage is due to inadequate maintenance and inspections.
- Damage is due to improper storage and/or usage.
- Repairs were performed by the user without our permission.
- Non-original spare part was used.

WARRANTY CERTIFICATE

You are kindly requested to read the following carefully.

PERIOD

The warranty starts from the date of purchase (date on distributors invoice).

Warranty is valid for a period of twelve (12) months.

WARRANTY

This warranty is limited only to provide replacements of the parts recognized by the Company as defective (excluding worn outs and consumables.)

The Company is not responsible for any misuse or abuse of the product after purchase and/or caused by negligence from the content of this manual.

In case of failure using the device, our Customer Support Department will inform you of the appropriate methods of dealing with your claim and advise you of your nearest approved service center.

EXCLUSIONS

Warranty does not apply for damages or failures caused by:

Incorrect use by users for misuse or for error in transportation, in handling or in maintenance.

Use of non-genuine parts/accessories, or of incorrect specifications.

THIS MANUAL SHALL BE REVISED WITHOUT PRIOR
NOTICE FOR IMPROVEMENT PURPOSES

DO NOT COPY AND/OR QUOTE THE CONTENTS WITHOUT
PRIOR WRITTEN CONSENTS.

Copyright:
C20