AUSAVINA
MATERIAL HANDLING SOLUTIONS

CE

AUSAVINA CO., LTD

OPERATION MANUAL

AUSAVINA PORCELAIN LIFTER (APL20)

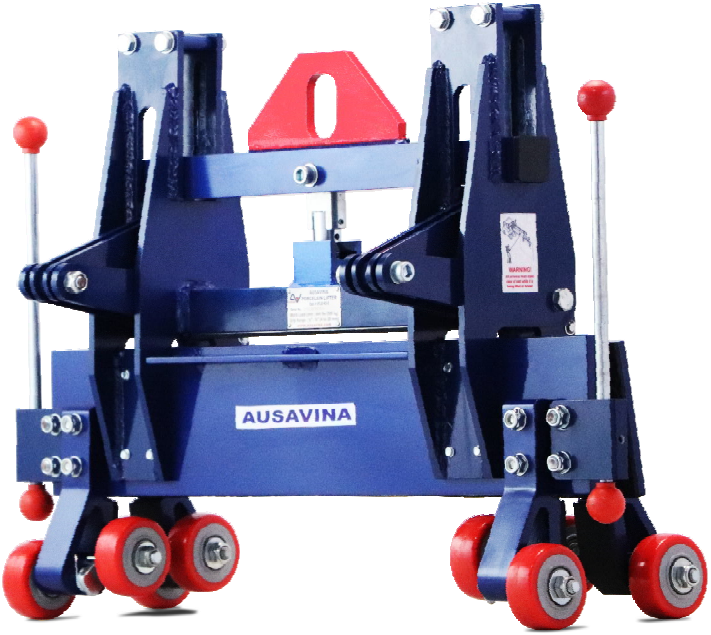

AUSAVINA CO., LTD
No. 944/1 Nguyen Thi Minh Khai St.,
Tan Thang Quarter, Tan Binh Ward,
Di An City, Binh Dương Province, Vietnam
Website: www.ausavina.com
Email: sales@ausavina.com
Tel: (+84) 274 373 9448 - (+84) 274 373 9449
Fax: (+84) 274 373 9447

APPLICABLE MODEL of this PORCELAIN LIFTER:

APL20

INDEX

Item		Pages
I	Overview	1
II	Technical Specifications	1
	1) Dimensions	2
	2) Spare part list	3
III	Instructions for use	6
	1) Safety Instructions	6
	2) Device usage	8
IV	Appendix	12
V	Technical Problems & Solutions	13
VI	Inspection & Maintenance	13
VII	Warranty	14
	Warranty Certificate	15

<u>Note:</u> Please read this Operation Manual carefully before using the device.

I. OVERVIEW:

- Porcelain Lifter is mainly designed to work with a forklift boom for lifting and moving materials which are flat, long, thin, delicate and breakable namely porcelain slabs.
- The clamping mechanism is fully automatic.
- Clamping from both sides improves clamping force and holds the lifting material more securely. The lifted material will be moved more stably with less wobbling.
- The surfaces for material contact are covered by rubber pads to prevent from damages or cracks when lifting.
- Two guide shafts lead the lifter to the right position.
- Porcelain Lifter helps reducing labor and ensuring safety for operators.

II. TECHNICAL SPECIFICATIONS:

- The Porcelain Lifter is made of aluminum, so it is light and sturdy.
- The device is designed with two clamping mechanisms which distribute the lifting force evenly. The evener the lifting force, the better the holding capacity.
- Porcelain Lifter has 8 wheels. The lower four will make it easy for maneuvering on a floor. The upper four are designed to lead the porcelain slab to act as a guide when the slab glides into the lifter. Make sure the slab is at the center of the two clamps.

1) Dimensions:

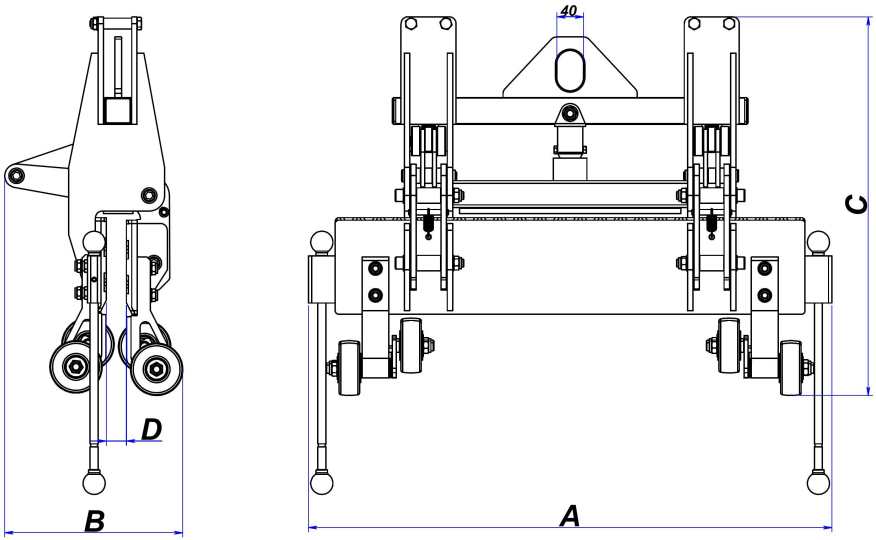

Length (A) inches (mm)	Width (B) inches (mm)	Height (C) inches (mm)
30 11⁄16 (780)	10 7⁄16 (265)	22 1⁄4 (565)

Grip Range inch (mm)	Net weight lbs (kg)	WLL* lbs (kg)
3⁄16 ~ 13⁄16 (4 ~ 20)	50 (23)	660 (300)

** W.L.L: Work load limit*

2) SPARE PART LIST:

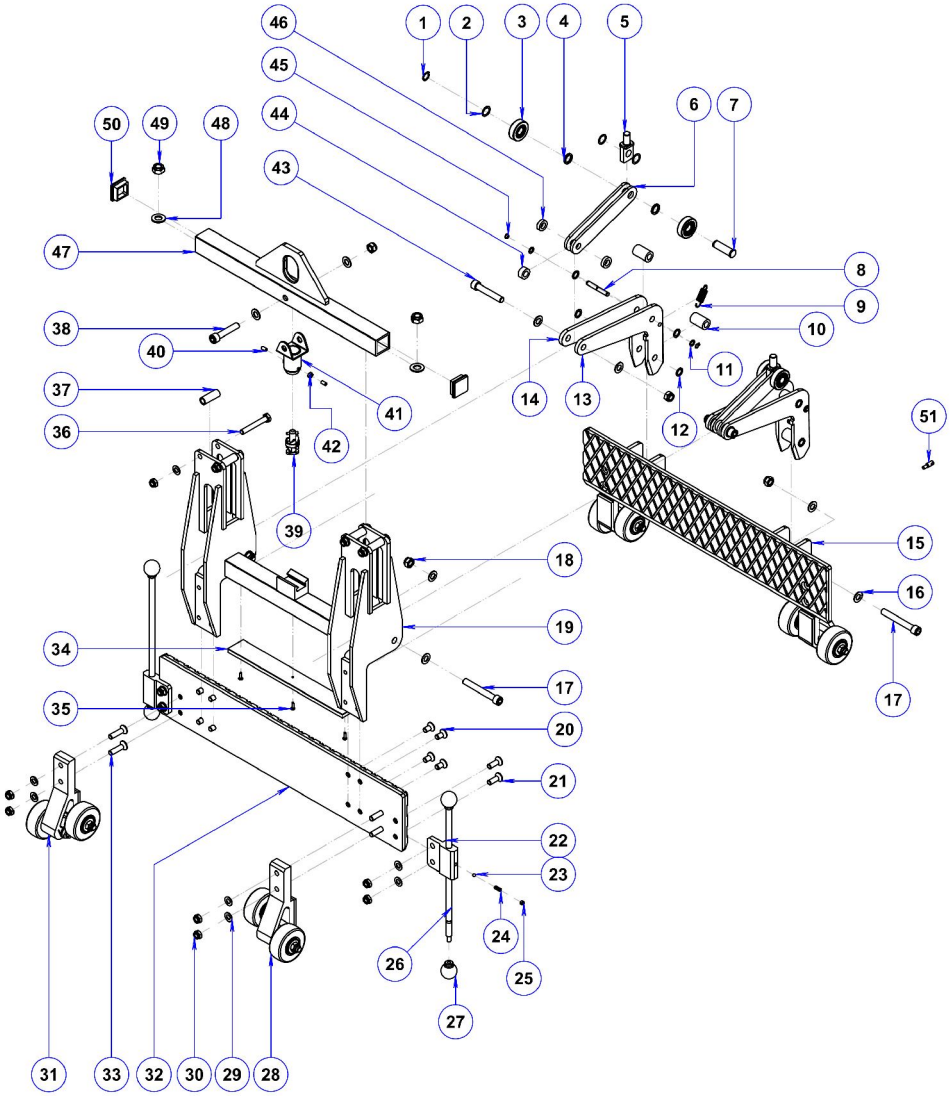

SPARE PART LIST

POS.	CODE	DESCRIPTION	QTY.
1	APL20-01	Circlip Ø15	2
2	APL20-02	Aluminum washer Ø16	6
3	APL20-03	Roller	4
4	APL20-04	Washer Ø16	4
5	APL20-05	Lifting hook	2
6	APL20-06	Clamp arm 1	4
7	APL20-07	Pin, clamp arm	2
8	APL20-08	Shaft	2
9	APL20-09	Extension spring	2
10	APL20-10	Spacer1	4
11	APL20-11	Aluminum washer Ø8	4
12	APL20-12	Brass washer Ø12	8
13	APL20-13	Lever arm 1	2
14	APL20-14	Lever arm 2	2
15	APL20-15	Clamp jaw 1	1
16	APL20-16	Washer Ø12	14
17	APL20-17	Allen bolt M12 x 90	4
18	APL20-18	Lock nut M12	7
19	APL20-19	Main body	1
20	APL20-20	Allen bolt countersunk M10 x 20	8
21	APL20-21	Allen bolt countersunk M10 x 30	4
22	APL20-22	Retainer, guide shaft	2
23	APL20-23	Steel ball	2
24	APL20-24	Compression spring	2
25	APL20-25	Allen set screw M8 x 6	2

POS.	CODE	DESCRIPTION	QTY.
26	APL20-26	Guide shaft	2
27	APL20-27	Plastic ball	4
28	APL20-28	Wheel component 1	2
29	APL20-29	Washer Ø10	16
30	APL20-30	Lock nut M10	16
31	APL20-31	Wheel component 2	2
32	APL20-32	Clamp jaw 2, fixed	1
33	APL20-33	Allen bolt countersunk M10 x 40	8
34	APL20-34	Rubber pad	1
35	APL20-35	Screw M4 x 15	3
36	APL20-36	Bolt M10 x 70	4
37	APL20-37	Spacer 2	4
38	APL20-38	Allen bolt M12 x 60	1
39	APL20-39	Automatic locking latch	1
40	APL20-40	Allen set screw M6 x 12	2
41	APL20-41	Catcher, automatic locking latch	1
42	APL20-42	Nut M6	2
43	APL20-43	Allen bolt M12 x 70	2
44	APL20-44	Spacer 3	2
45	APL20-45	Circlip Ø8	4
46	APL20-46	Spacer 4	4
47	APL20-47	Lifting bar	1
48	APL20-48	Washer Ø14	2
49	APL20-49	Lock nut M14	2
50	APL20-50	Rubber cap	2
51	APL20-51	Pin, spring	2

III. INSTRUCTIONS FOR USE:

1) Safety Instructions:

WARNINGS: Before using the Porcelain Lifter, please confirm the surfaces of the lifting material to be lifted are flat, smooth, and free from dust, oil, or any kind of such harmful substances which allow slipping for lifting.

a) For the Porcelain Lifter:

Cautions:

- Carefully consider and follow all the safety regulations and applicable laws in your country for the operations.
- It is strongly recommended that only employees who are highly trained or experienced are allowed to operate this device. Safety rules and regulations must be strictly respected and followed.
- Lift up the slab slowly. If the slab is not balanced, lower the lifter, adjust the alignment and lift again.

Warnings:

- Inspect the lifter carefully and thoroughly. If the rubber pads of clamp plates are worn-out or damaged, do not use, replace with new pads.
- This Porcelain Lifter is designed for clamping and lifting slabs ranging from 3⁄16" to 13⁄16" (4 to 20 mm). Determine the weight of the slab to be lifted. Do not exceed the WLL (Work Load Limit) shown on page 2.
- All employees must stand within safe area while slabs are being lifted or moved.
- Check to make sure the rubber pads are free from dirt, grease and other substances that may reduce their effectiveness.
- Do not lift wet slabs. The grip depends on friction. Lifting wet slab may cause the rubber pads to lose their grips.
- Position the lifter at the center of the slab to be lifted, so that the load is balanced.
- Make sure that the slab is inserted to the full depth into the opening of the lifter (see Appendix at page 12)

b) General Safety for Instructions:

Cautions:

- In order to protect from any accident, it is important to follow safety rules and regulations.
- Read the Operation Manual carefully before using.
- Make sure that the Operation Manual is always available beside the place where the lifter is used.
- Give permissions to operate the Porcelain Lifter only to persons who are well-trained and competent to work.
- Use appropriate PPE (Personal Protective Equipment) such as helmet, gloves, and safety boots, etc.
- Ensure and confirm each time before using the Porcelain Lifter has No Damage mechanically and functionally and is ready to be operated safely in the safe working conditions.
- Repairs and checks are to be made only by qualified persons.
- If any part worn-out, replace with a new one or contact the manufacturer.
- Clean the device thoroughly after using.
- Store the lifter in a well-ventilated place, avoid places with high heat or humidity.

Warnings:

- Never leave a lifted load unsupervised.
- Never allow yourself or anybody to go under the lifted slab.
- Be sure to check the lifter and its accessories duly and periodically, there should be no damage or loosening of fasteners or any irregular unfunctional sound, also before using re-confirm those points once again, then use the lifter for your safe operations.

c. Automatic locking latch system:

- Automatic locking latch system consists of an Automatic latch which has a cam wheel to be rotated when the device is lifted up and of a catcher being hung on a lifting bar.
- After a firm clamping, the material can be lifted and moved to a desired location.

- For releasing the material, the clamping mechanism shall be released by engaging Lifting bar from Main body to avoid Clamp jaws to close for clamping.
- In this condition, when lifting the Lifter, the Clamp jaws are kept free from clamping, so that the Lifter can be released from the slab and to be moved to another. Make sure that no dust is inside the automatic locking latch, regularly check and lubricate oil to ensure the proper operation.

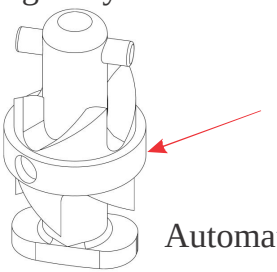

2) Device usage:

Preliminary Safety Checks:

"Competent Person" shall check the following before each use.

WARNING: Check the following before and after operations:

- The Porcelain Lifter is correctly installed/hung in the right manner described in this paragraph and to be operated in safe working conditions.

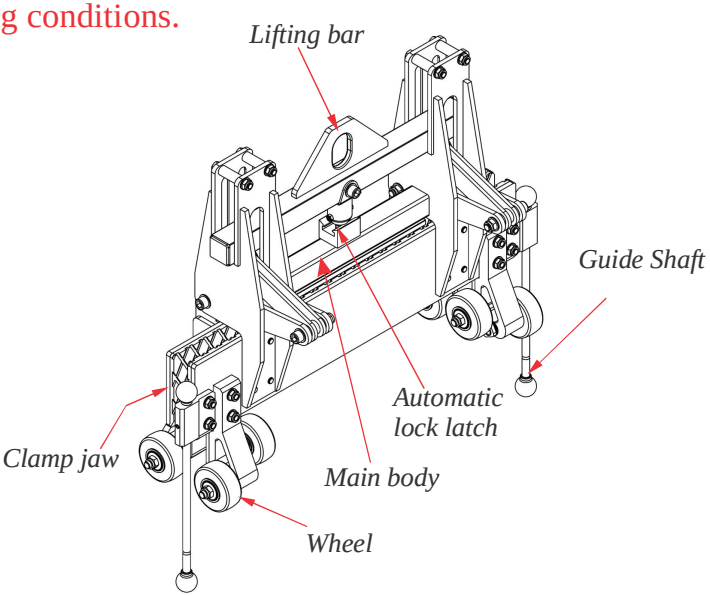

Step 1: Hook the Porcelain Lifter:

- Hook the Porcelain Lifter to a forklift boom (figure 1a).
- Pull down the two guide shafts (Figure 1b) and move the forklift truck toward the lifting material.
- Move the lifter towards the porcelain slab until the plastic balls of the guide shafts touch the porcelain slab slightly (Figure1c).

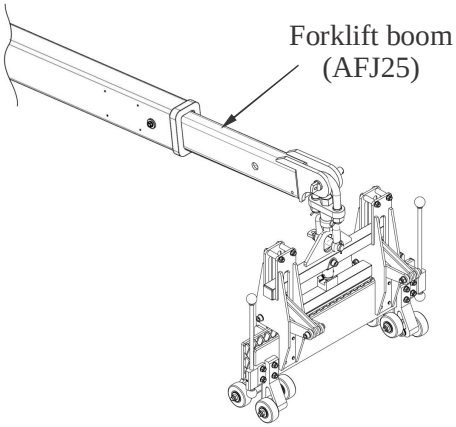

Figure 1a

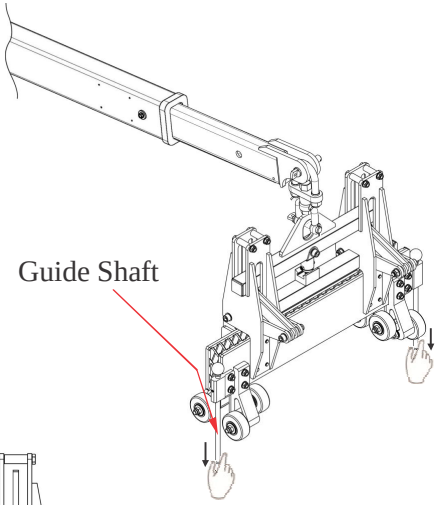

Figure 1b

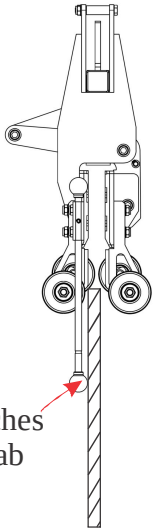

Figure 1c

Step 2: Grip the Porcelain slab:

- Lowering the lifter to be perpendicular to the porcelain slab and place at the center of the slab (Figure 2a).

Note: Position the lifter securely at the center of the porcelain slab so that the load is balanced. Make sure that the slab is inserted in full depth to the opening of the lifter (Refer page 12).

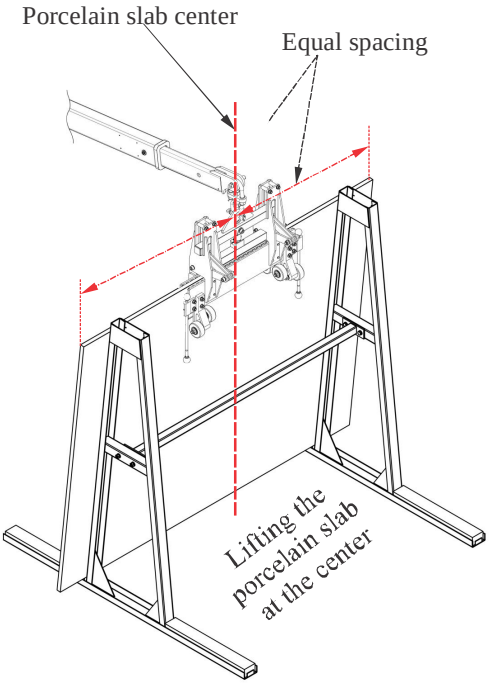

Figure 2a

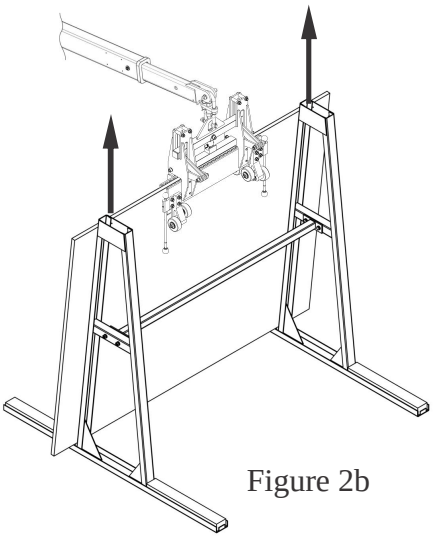

Figure 2b

- Lift the porcelain lifter slowly to ensure the load is balanced. While lifting the material, the automatic locking latch will release the clamp jaws to grip the material tightly. Now the material is ready to be moved away from the stand (Figure 2b).

Note: If the clamp jaws do not grip the porcelain slab firmly, lower the lifter, recheck the status, and lift it up again.

Step 3: Move the Porcelain slab:

Move the porcelain slab to the desired position.

Warning: All the people who are not obligated must stand within safety area while slab is being lifted or moved. Do not allow yourself or anybody to go under the lifted slab.

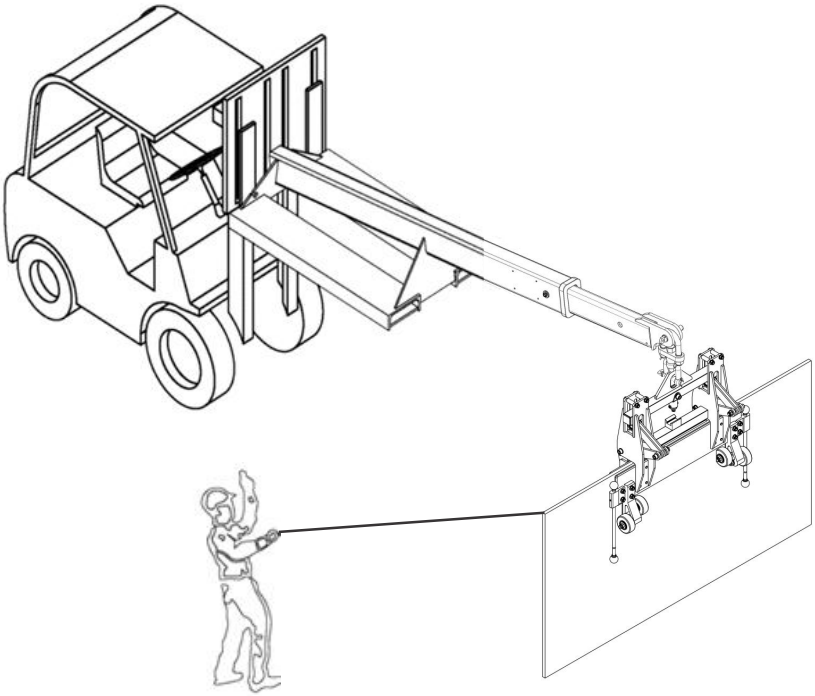

Step 4: Remove the lifter from the porcelain slab:

Lower the lifter slowly until the lifter and the swivel shackle are relaxed, the locking latch will lock the Main body automatically to keep the clamp jaws open to release the slab. Then move the lifter away from the slab.

Note:

- Before lowering the porcelain slab, make sure there are no obstacles to interfere when lowering the porcelain slab.
- If the lifter still grips the porcelain slab, do all the steps again, move the lifter up and down to unlock the locking latch.

IV. APPENDIX:

1) Correct and incorrect methods of clamping the porcelain slab:

WARNING

- Confirm that the Porcelain lifter is suitable for your demands.
- Do not exceed the WLL (Work Load Limit, page 2).
- Porcelain slab thickness must be within G.R. (Grip Range, page 2).

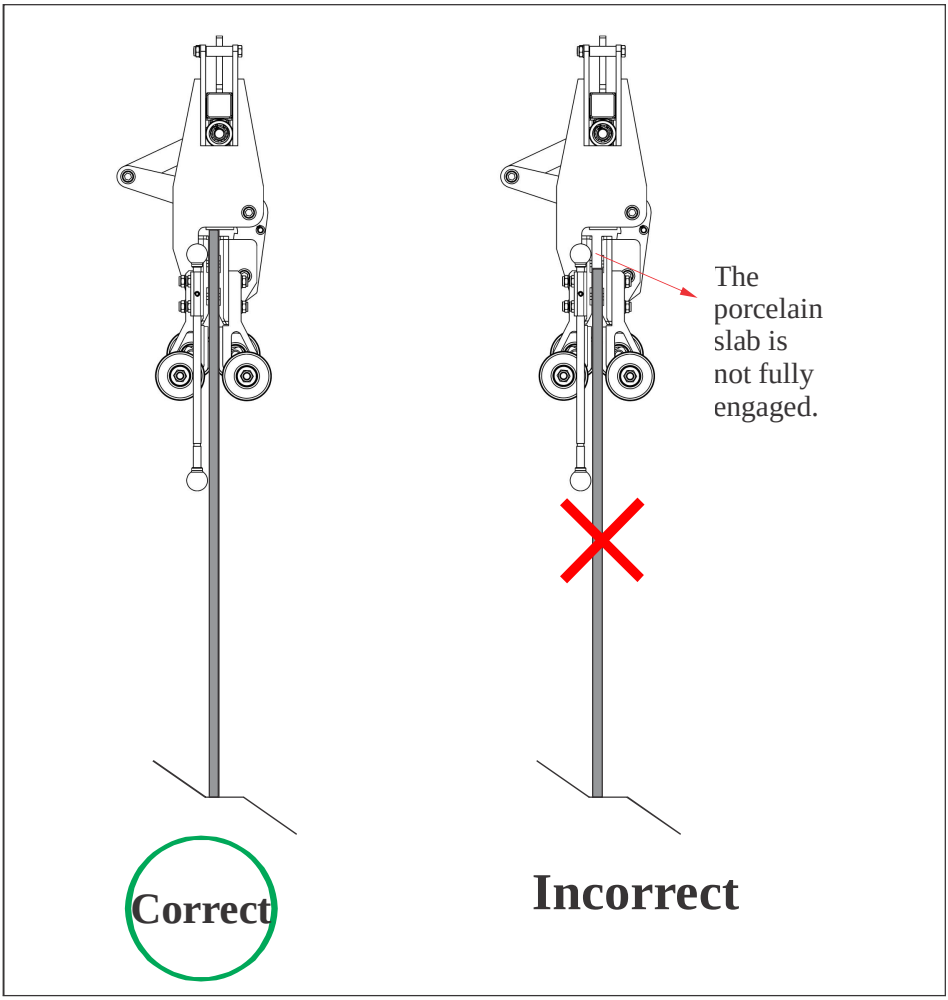

V. TECHNICAL PROBLEMS & SOLUTIONS:

Technical Problems	Cause	Solution
Automatic locking latch does not work properly.	Dust and/or rust	Clean the locking latch, lubricate
The wheels are stuck.	Dust, bearings are damaged	Clean the wheels, replace with new bearing (s)

VI. INSPECTION & MAINTENANCE:

- Schedule periodic maintenance for the lifter, especially for the rubber pad of clamp plates, automatic locking latch and rollers.
- Reserve expendable and/or necessary spare parts for maintenance or repair.
- Regularly check the tightening conditions of all the bolts and nuts.
- Always keep the lifter clean and away from grease or other substances as they may reduce the effectiveness of the rubber pads and cause them lose their grip.
- Store the lifter in a well-ventilated place, avoid places with high heat or humidity.

VII. WARRANTY:

At the time of delivery, it is necessary to inspect the Porcelain Lifter to make sure that it has not been damaged during shipment. Any claims must be submitted within 8 days from the date of delivery. We provide a one (1) year warranty on the Porcelain Lifter from the date of purchase.

During warranty period, we will provide the replacement parts at no charge (shipping and handling fees may apply).

Warranty coverage is void if:

- The operator failed to comply with the instructions in the manual.
- The specifications are not followed.
- Damage is due to inadequate maintenance and inspections.
- Damage is due to improper storage and/or usage.
- Repairs were performed by the user without our permission.
- Non-original spare part was used.

WARRANTY CERTIFICATE

You are kindly requested to read the following carefully.

PERIOD

The warranty starts from the date of purchase (date on distributors invoice).
Warranty is valid for a period of twelve (12) months.

WARRANTY

This warranty is limited only to provide replacements of the parts recognized by the Company as defective (excluding worn outs and consumables.)
The Company is not responsible for any misuse or abuse of the product after purchase and/or caused by negligence from the content of this manual.
In case of failure using the device, our Customer Support Department will inform you of the appropriate methods of dealing with your claim and advise you of your nearest approved service center.

EXCLUSIONS

Warranty does not apply for damages or failures caused by:
Incorrect use by users for misuse or for error in transportation, in handling or in maintenance.
Use of non-genuine parts/accessories, or of incorrect specifications.

THIS MANUAL SHALL BE REVISED WITHOUT PRIOR NOTICE FOR IMPROVEMENT PURPOSES

Copy right:
L20

DO NOT COPY AND/OR QUOTE THE CONTENTS WITHOUT PRIOR WRITTEN CONSENTS.