AUSAVINA
MATERIAL HANDLING SOLUTIONS

AUSAVINA CO., LTD

OPERATION MANUAL

AUSAVINA RATCHET SEAM SETTER M2 (ARSS2)



AUSAVINA CO., LTD
No.944/1 Nguyen Thi Minh Khai St.,
Tan Thang Quarter, Tan Binh Ward,
Di An City, Binh Dương Province, Vietnam
Website: www.ausavina.com
Email: sales@ausavina.com
Tel : (+84) 274 3739 448 - (+84) 274 3739 449
Fax : (+84) 274 3739 447

APPLICABLE MODEL
of this RATCHET SEAM SETTER M2:

ARSS2

INDEX

Item		Page
I	Equipment General Information	1
II	Technical Specifications	1
	1) Dimensions	2
	2) Spare part list	3
III	Safety Instructions	6
	1) General Warnings and Cautions	6
	2) Device usage	7
IV	Technical problems & Solutions	11
V	Inspection & Maintenance	11
VI	Warranty Policy	12
	Warranty Certificate	13

General Safety Operation Manual Instructions Summary:

It is essential to carefully review and understood this Operation Manual before operating the equipment. Failing to read and understand this entire manual may cause injury or death to personnel, or damage to equipment and the products that are being handled by this equipment if not properly followed. This safety summary includes general safety precautions and instructions that must be understood and applied before, during, and after operations, as well as maintenance to ensure personnel safety and protection of equipment. Prior to performing any task, the contents included in this manual should be reviewed and fully understood. This manual highlights essential operating or maintenance procedure, practice, condition, statement, etc. that if not strictly observed, could result in injury, or death of, personnel or long term hazards; could result in damage to products being handled, or damage to/destruction of equipment.

I. EQUIPMENT GENERAL INFORMATION:

- The Ratchet Seam Setter M2 (ARSS2) is designed with easy adjustment feature to help position and join the two pieces of (e.g. stones, slabs, or tiles) together equally by its edges prior gluing them.
- User/Operator can easily align the gap between the two pieces of (e.g. stones, slabs, or tiles) by repeatedly move the ratchet handle.
- The suction cups are made out of soft rubber material which enhances firm adhesion between the two pieces of (e.g. stones, slabs, or tiles) and the suction cups. The rubber material is designed to help prevent damaging to or scratching the surfaces of the pieces of (e.g. stones, slabs, or tiles).
- The equipment is handy and convenience for users in stones, slabs and tiles industry. Its easy operation feature helps increase time efficiency and productivity.

II. TECHINCAL SPECIFICATIONS:

- ARSS2 is mainly made out of aluminum, it is lightweight and durable.
- It consists of two suction cups and adjustment knobs with attached pusher for countertop surface protection purposes.
- Two suction cups combined with the two connect racks (also known as rails) helps aligning two pieces of (e.g. stones, slabs, or tiles) at the same height with the same gap quickly and accurately.

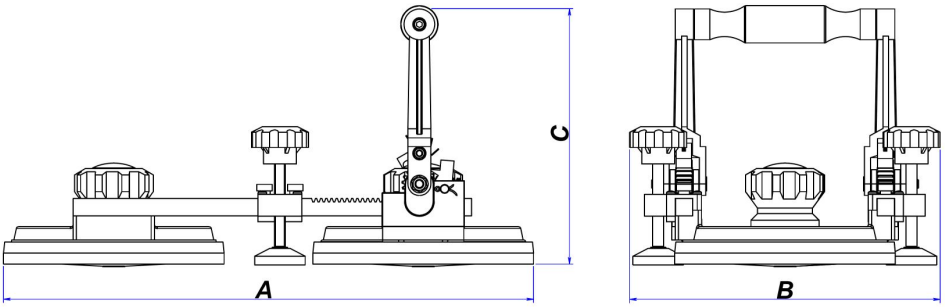

1) Dimensions:

Length (A) inches (mm)	Width (B) inches (mm)	Height (C) inches (mm)	Net weight lbs (kg)	Diameter of suction cup inches (mm)
15 15⁄16 ~ 19 5⁄16 (405 ~ 490)	10 7⁄8 (276)	8 7⁄8 (225)	13.2 (6)	8 (203)

2) SPARE PART LIST:

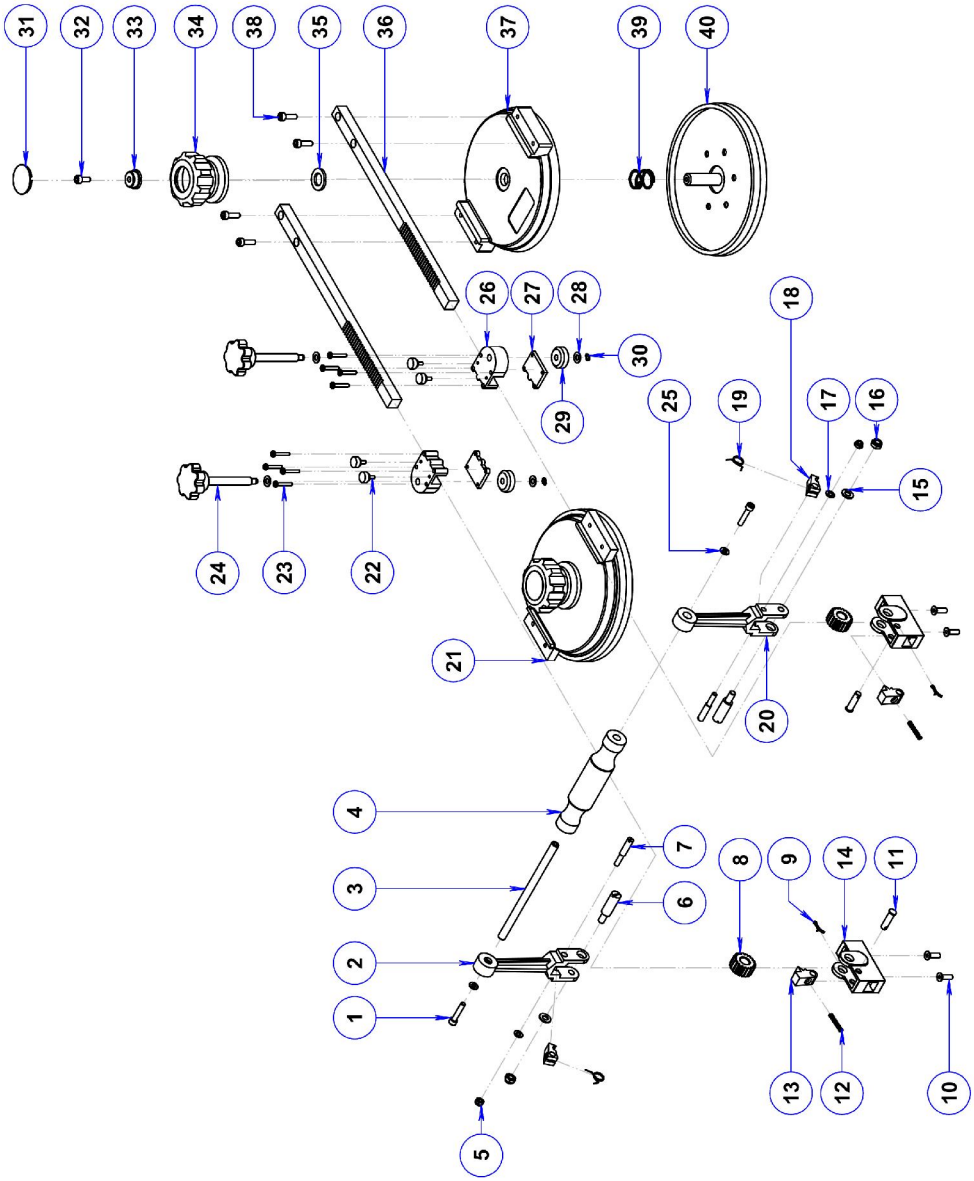

POS.	CODE	DESCRIPTION	QTY.
1	ARSS2-01	Allen bolt M6 x 30	2
2	ARSS2-02	Ratchet handle, right	1
3	ARSS2-03	Shaft, handle	1
4	ARSS2-04	Handle linker	1
5	ARSS2-05	Lock nut M6	2
6	ARSS2-06	Pin 1	2
7	ARSS2-07	Pin 2	2
8	ARSS2-08	Gear	2
9	ARSS2-09	Cotter pin ø2.5	2
10	ARSS2-10	Allen bolt countersunk M6 x 20	4
11	ARSS2-11	Housing Pin	2
12	ARSS2-12	Spring 1	2
13	ARSS2-13	Latch, bottom	2
14	ARSS2-14	Box, gear	2
15	ARSS2-15	Washer ø8	2
16	ARSS2-16	Lock nut M8	2
17	ARSS2-17	Washer ø6	2
18	ARSS2-18	Latch, top	2
19	ARSS2-19	Torsion spring	2
20	ARSS2-20	Ratchet handle, left	1

POS.	CODE	DESCRIPTION	QTY.
21	ARSS2-21	Suction cup A	1
22	ARSS2-22	Turn-knob M4	4
23	ARSS2-23	Screw M4 x 25	8
24	ARSS2-24	Turn-knob M10	2
25	ARSS2-25	Spring washer ø6	2
26	ARSS2-26	Slide housing	2
27	ARSS2-27	Slide housing cover	2
28	ARSS2-28	Washer ø7	4
29	ARSS2-29	Leveler piece (pusher), knob	2
30	ARSS2-30	Circlip ø7	2
31	ARSS2-31	Cap	2
32	ARSS2-32	Allen bolt M6 x 15	2
33	ARSS2-33	Aluminum Bushing	2
34	ARSS2-34	Suction cup knob M16	2
35	ARSS2-35	Spacer	2
36	ARSS2-36	Rack, right	2
37	ARSS2-37	Suction cup B	1
38	ARSS2-38	Allen bolt M6 x 20	4
39	ARSS2-39	Spring 2	2
40	ARSS2-40	Rubber pad	2

III. SAFETY INSTRUCTIONS

1) General Warnings, Cautions and Notes:

a. Before Operations:

- Check the surfaces of the pieces of (e.g. stones, slabs, or tiles) and suction cups to ensure they are clean, away from dust, grease or other substances which could lead to improper operations.
- Check to ensure all bolts and nuts are tightened securely.
- Check the equipment overall to ensure it is in good operating conditions, especially all turn-knobs and suction cups.
- Use appropriate PPE (Personal Protective Equipment) to protect against injury.

b. During Operations:

- Always check to ensure the entire surface of the suction cups sucking to the surface of the piece of (e.g. stone, slab, or tile) firmly and securely.
- Follow all the steps and instructions in this Operation Manual.
- For safety purposes, you (the operator) are responsible for following all applicable laws and regulations in your region.

c. After Operations:

- Clean the equipment thoroughly when not in use.
- Keep the equipment, especially the suction cups in good conditions by follow the maintenance instruction after each use.
- Store the equipment in a well-ventilated place, avoid places with high heat and/or humidity.

Note: See the Maintenance Instruction section in this manual for more details.

2. Device usage:

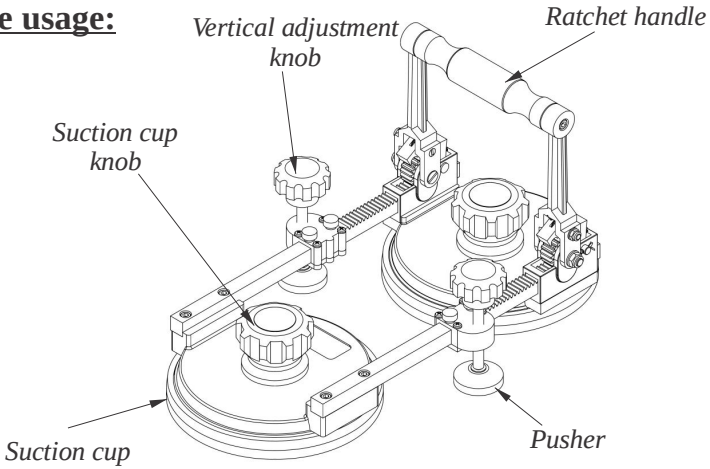

Step 1. ***Positioning the Ratchet Seam Setter:***

- Place the ratchet seam setter on the two pieces of (stones, slabs, or tiles) (Figure 1.1), position a suction cup on each side to be joined.
- Tighten the turn-knobs on both suction cups clockwise (Figure 1.2) to activate suction force untill duly sucked on the stone's surface.

Note: *Adjust two suction cups far apart before placing it on the pieces of (stones, slabs, or tiles)*

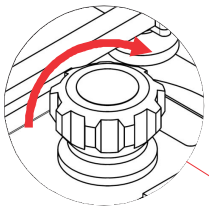

Figure 1.2

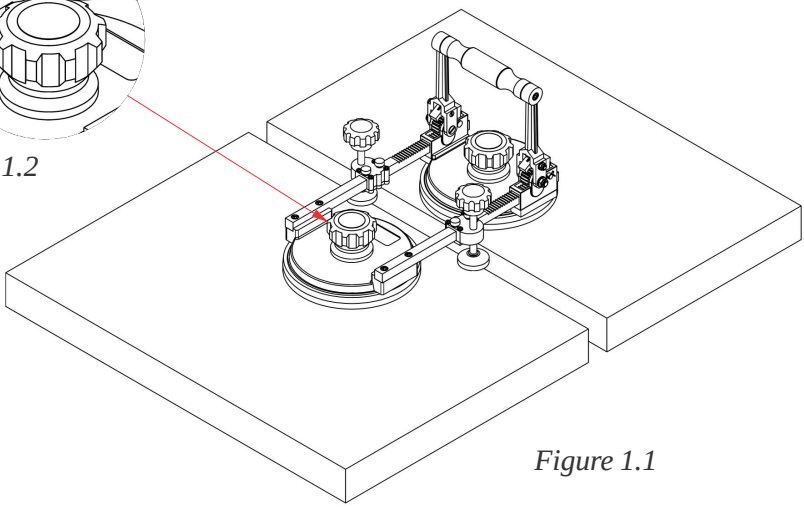

Figure 1.1

Step 2. ***Aligning the gap:***

- Pull on the ratchet handle back and forth to align the gap between two pieces of (stones, slabs, or tiles) together until no more visual gap could be seen through visual observation (Figure 2.1).

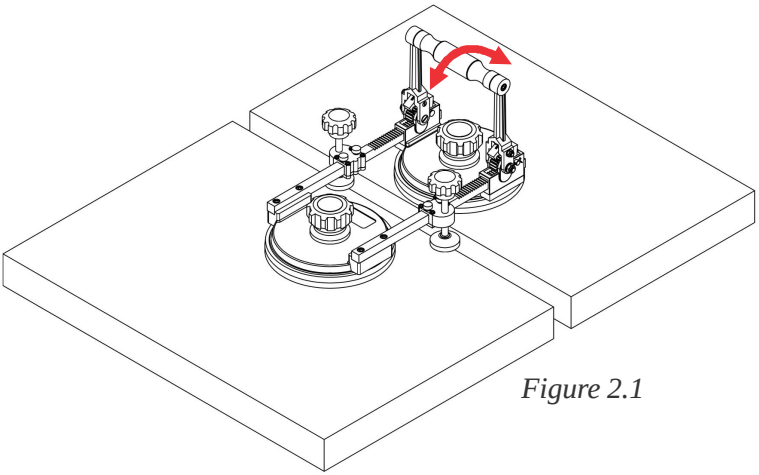

Figure 2.1

Step 3. ***Aligning the gap vertically to an equal height:***

- Turn the turn-knobs anticlockwise (Figure 3.1) to slide the pushers on the rails, center the leveler pieces (also known as the pushers) at the joint (Figure 3.2), then turn each turn-knob clockwise to adjust the pusher position.



Figure 3.1

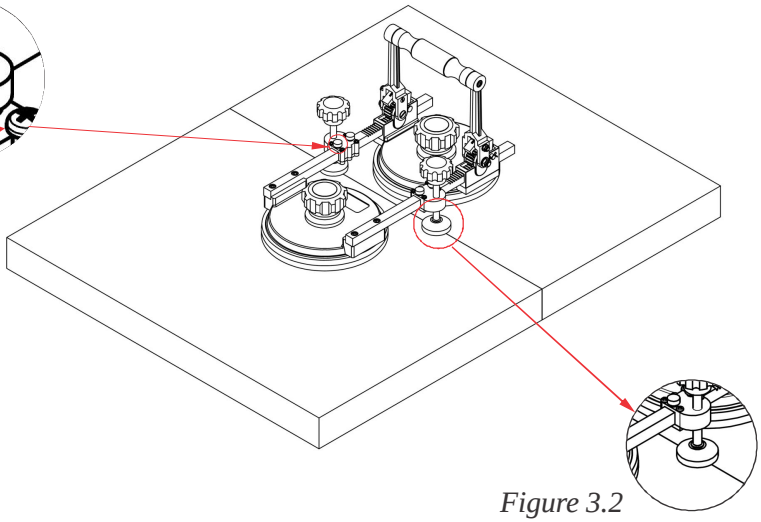

Figure 3.2

- Tighten the pusher into the stone surface by turning the adjustment knob clockwise (Figure 3.3) untill the height of two piece of (e.g. stones, slabs, or tiles) is aligning evenly. (*Figure 3.4*).

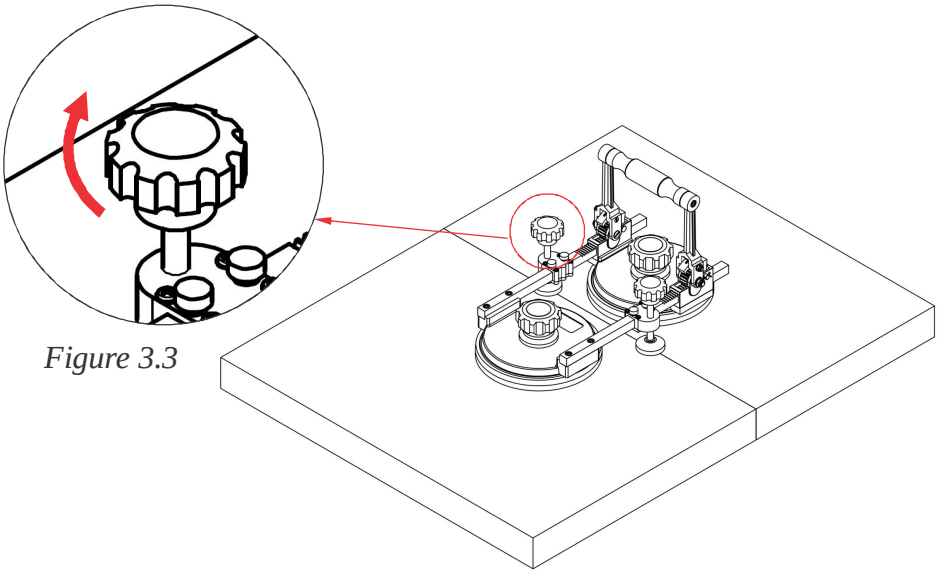

Figure 3.3

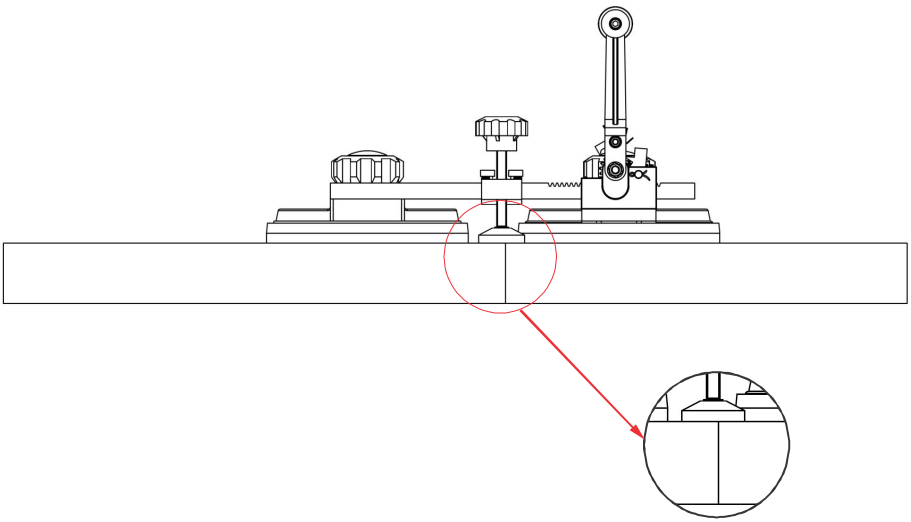

Figure 3.4

Before

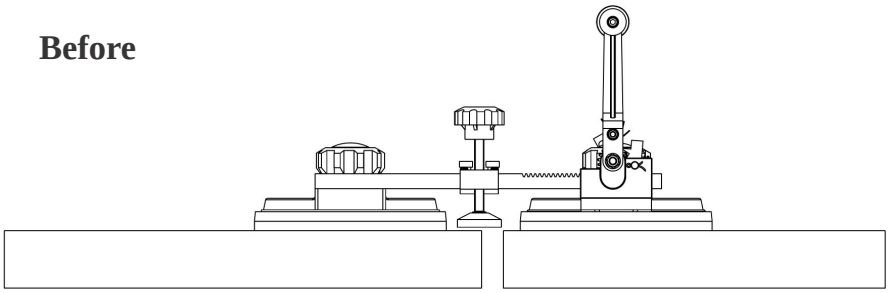

After

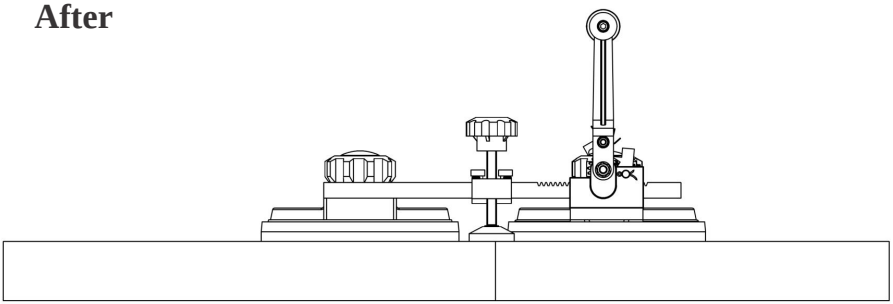

- To release the ratchet seam setter, turn the adjustment knob anticlockwise to raise the pusher approximately 6mm off the surface.
- Turn both suction cup knobs anticlockwise until they disengage completely out of the counter top.

IV. TECHNICAL PROBLEMS & SOLUTIONS:

Technical problem	Cause	Solution
The turn-knobs can not be loosened or tightened	Dust and/or rust or thread is damaged	Clean, lubricate or replace with a new one.
Loose suction cups	Suction cups have dust or damaged	Clean the suction cups or replace with a new one

V. INSPECTION & MAINTENANCE

- Operator is responsible to check the equipment regularly, not limited to check the suction cups, ratchet handle and turn-knobs to ensure the equipment is in good operating conditions.
- Periodically, operator is responsible to schedule equipment maintenance, especially for tighten all bolts and nuts securely.
- Operator must keep the suction cups clean and away from grease or other substances as they may reduce their effectiveness and cause them to loss their grip.
- Operator is recommended to always keep necessary spare parts on hand for immediate maintenance or repair purposes before operating.
- Operator is responsible to ensure all parts are genuine parts from the manufacture, and they are designed specifically for to be installing to this equipment.
- Operator is responsible to ensure all repair installations are performing appropriately and in safety manner.
- Store this equipment in a well-ventilated place (dry and cool); avoid places with high heat and/or humidity.
- Keep maintenance records to ensure safety checks are carried out.

VI. WARRANTY POLICY:

At the time of delivery, it is necessary to inspect the **Ratchet Seam Setter M2 (ARSS2)** to make sure that it has not been damaged during shipment. The product at the time of dispatch is warranted to be free of defects in material or workmanship.

Claims for errors, shortages, defects, or nonconformities ascertainable upon inspection must be made in writing within eight business days from the date of product delivery. Claims not made as provided above and within the applicable time period will be barred and no other claims will be considered.

We provide a one (1) year warranty on the **Ratchet Seam Setter M2 (ARSS2)** from the date of purchase.

During warranty period, we will provide the replacement parts at no charge (Please note: shipping and handling fees may apply).

Warranty coverage is void if:

- The operator failed to comply with the instructions in the manual.
- The specifications are not followed.
- Damage is due to inadequate maintenance and inspections.
- Damage is due to improper storage and/or usage.
- Modification and repairs made to the equipment were performed by the user/operator without the manufacture's knowledge and agreement.
- Aftermarket or none genuine spare parts were used for repair installation.
- Modification and repair installations were conducted by uncertified individual.

WARRANTY CERTIFICATE

You are kindly requested to read the following carefully.

PERIOD

The warranty starts from the date of purchase (date on distributor's invoice).
Warranty is valid for a period of twelve (12) months.

WARRANTY

This warranty is limited only to provide replacements of the parts recognized by the Company as defective (excluding worn outs and consumables.)

The Company is not responsible for any misuse or abuse of the product after purchase and/or caused by negligence from the content of this manual.

In an event the equipment failed to operate and/or required technical support, operator/user is responsible for reaching out to our Customer Support Department. One of our team member will inform you (operator/user) of the appropriate procedures on how to file warranty claim and advise you to your nearest approved service center.

EXCLUSIONS

Warranty does not apply for damages or failures caused by:
Misuses, errors in transportation, incorrect handling or failing to maintain the equipment appropriately.
Use of non-genuine parts/accessories, or of incorrect specifications.

THIS MANUAL SHALL BE REVISED WITHOUT PRIOR NOTICE FOR IMPROVEMENT PURPOSES

DO NOT COPY AND/OR QUOTE THE CONTENTS WITHOUT PRIOR WRITTEN CONSENTS

All Right Reserved:
L20