# OPERATION MANUAL

# STONE VACUUM LIFTER 100 (SVL-100)




**AUSAVINA Co., Ltd.**
14528 S. Garfield Ave. Paramount, CA 90723 , USA
Website: www.ausavina.com
Email: sales@ausavina.com
Tel: 424-266-5193 Fax: 424-242-1268

## I.GENERAL:

- Designed for lifting, moving, installing a large-size slab.
- Superior vacuum lifter will satisfy customers' requirements.
- The rubber vacuum suction pads will protect a slab from scratching.
- The suction pressure maintains stability ensures a slab will not fall while operating.
- This Product has the ability to incline vertical from $0^{o}$–$90^{o}$

## II.STRUCTURE:

The equipment is made from steel and rubber. It includes the following basic parts:

Supporting rack system, suction pads system, pneumatic cylinder system, control system…

The racks are designed on the frame to put accumulator bottle, control valve, pressure gauge.

| | |
|---|---|
| **Item Code** | **SVL100** |
| **W.L.L** | **2200lbs (1000kg)** |
| **Net Weight** | **308lbs (140 kg)** |
| **Number of vacuum pads** | **4 Pcs** |
| **Minimum Slab Dimension** | **52”x28 3/8” (1320mmx720mm )** |
| **Inclination** | **$0^0$ – $90^0$** |
| **Maintaining Pressure of Pre-Vacuum Tank Bar** | **0,8 kg/$cm^2$ (Bar)** |

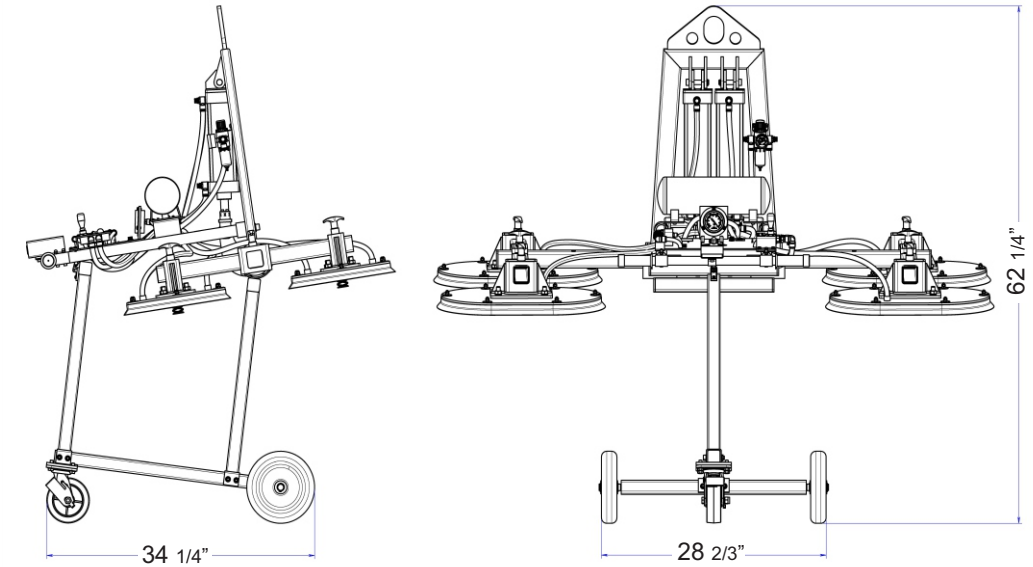

## III.SPARE PARTS LIST:

## III.1.Vacuum Lifter Parts::

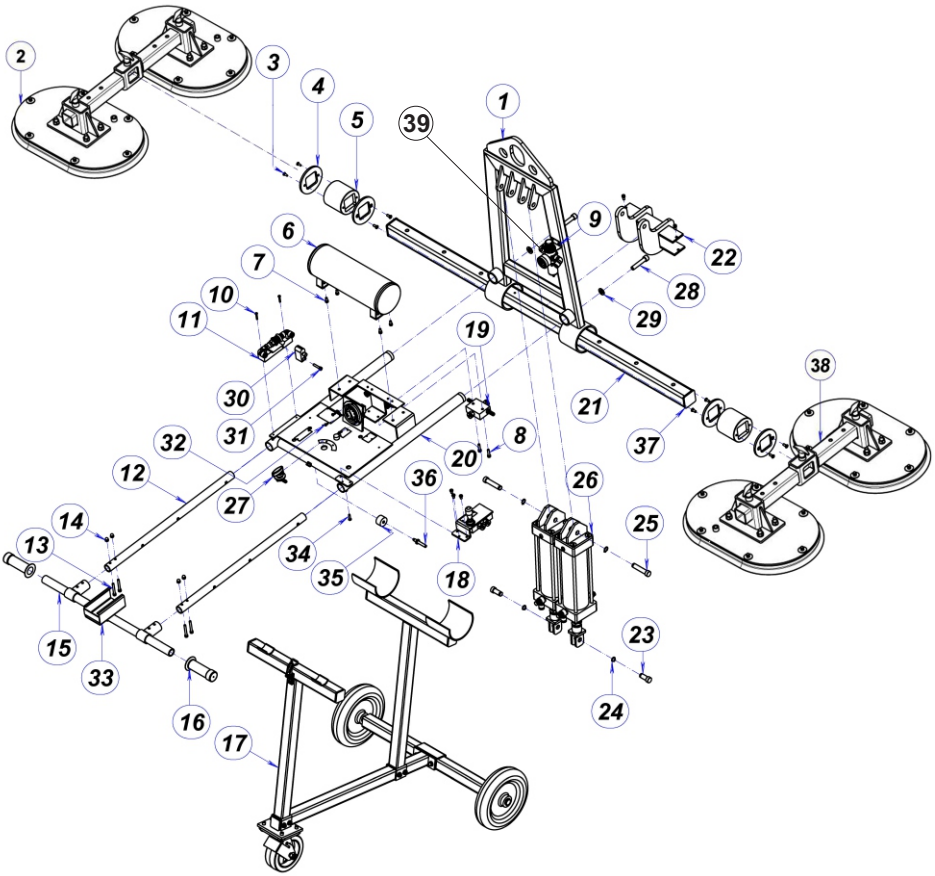

| POS | LIFTER PARTS DESCRIPTION | QTY | CODE |
|---|---|---|---|
| 01 | U frame | 01 | SVL100-001 |
| 02 | Suction face | 04 | SVL100-002 |
| 03 | Counter sink head M6 x 16 | 08 | SVL100-003 |
| 04 | Flange | 04 | SVL100-004 |
| 05 | The liner | 02 | SVL100-005 |
| 06 | Accumulator | 01 | SVL100-006 |
| 07 | Socket head M6 x 12 | 06 | SVL100-007 |
| 08 | Nut M6 | 02 | SVL100-008 |
| 09 | Screw M6 x 10 | 05 | SVL100-009 |
| 10 | Screw M4 x 25 | 11 | SVL100-010 |
| 11 | Insert Piece | 01 | SVL100-011 |
| 12 | Slide Tube | 02 | SVL100-012 |
| 13 | Socket head M6 x 45 | 04 | SVL100-013 |
| 14 | Cap Nut M6 | 04 | SVL100-014 |
| 15 | Tube handle | 01 | SVL100-015 |
| 16 | Rubber handle | 02 | SVL100-016 |
| 17 | Cart | 01 | SVL100-017 |
| 18 | Valve Gasket | 01 | SVL100-018 |
| 19 | Splitter | 01 | SVL100-019 |
| 20 | Harizontal frame | 01 | SVL100-020 |
| 21 | Cross square rail | 01 | SVL100-021 |
| 22 | Flip set | 01 | SVL100-022 |
| 23 | Lower pin | 02 | SVL100-023 |
| 24 | Circlip Ø14 | 04 | SVL100-024 |
| 25 | Uppon valve lock | 02 | SVL100-025 |
| 26 | Pneumatic cylinder | 02 | SVL100-026 |
| 27 | Knob | 01 | SVL100-027 |
| 28 | Socket head M12 x 60 | 02 | SVL100-028 |
| 29 | Washer Ø12 | 02 | SVL100-029 |
| 30 | The lock | 01 | SVL100-030 |

| | | | |
|---|---|---|---|
| 31 | Hex head bolts M6x30 | 01 | SVL100-031 |
| 32 | Screw M4x10 | 03 | SVL100-032 |
| 33 | Box mounted controls | 01 | SVL100-033 |
| 34 | Screw M5x20 | 01 | SVL100-034 |
| 35 | Large washer | 02 | SVL100-035 |
| 36 | Pins lock | 02 | SVL100-036 |
| 37 | 50 square rubber seal | 02 | SVL100-037 |
| 38 | Extension | 02 | SVL100-038 |
| 39 | Tilt Air Gauge | 01 | SVL100-039 |

## III.2.Cart Parts:

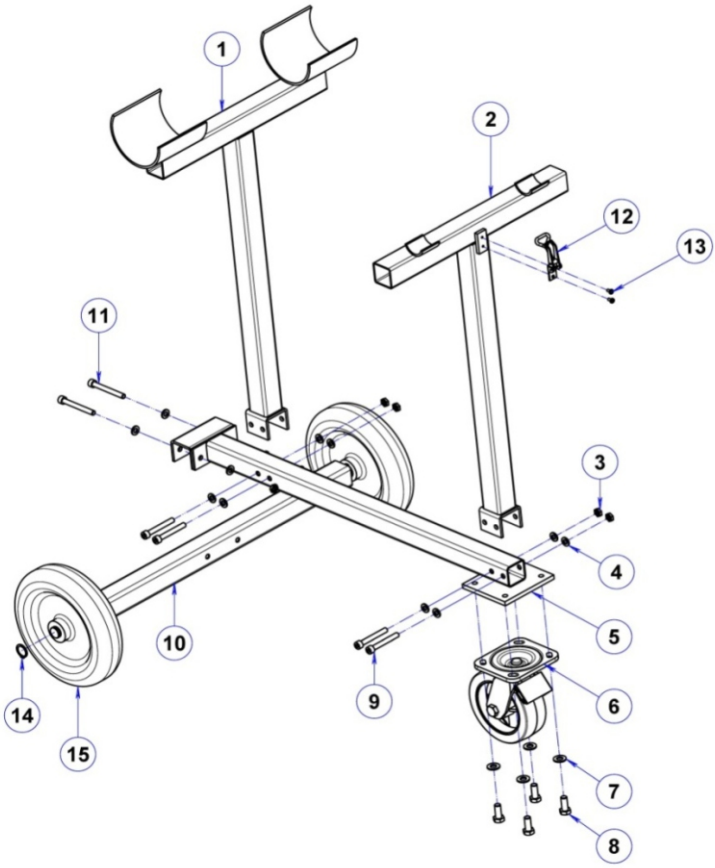

| POS | CART PARTS DESCRIPTION | QTY | CODE |
|---|---|---|---|
| 01 | Support A | 01 | SVL100-017.1 |
| 02 | Support B | 01 | SVL100-017.2 |
| 03 | Nut M8 | 06 | SVL100-017.3 |
| 04 | Washer Ø8 | 12 | SVL100-017.4 |
| 05 | Holder box B | 01 | SVL100-017.5 |
| 06 | Castor no.5 | 01 | SVL100-017.6 |
| 07 | Washer Ø10 | 04 | SVL100-017.7 |
| 08 | Bolt M10x25 | 04 | SVL100-017.8 |
| 09 | Socket head M8x60 | 04 | SVL100-017.9 |
| 10 | Holder box A | 01 | SVL100-017.10 |
| 11 | Socket head M8x70 | 02 | SVL100-017.11 |
| 12 | Lock | 01 | SVL100-017.12 |
| 13 | Screw M4x8 | 02 | SVL100-017.13 |
| 14 | Circlip Ø20x1.2 | 04 | SVL100-017.14 |
| 15 | Wheel 250 | 02 | SVL100-017.15 |

## III.3.Suction Pad Parts:

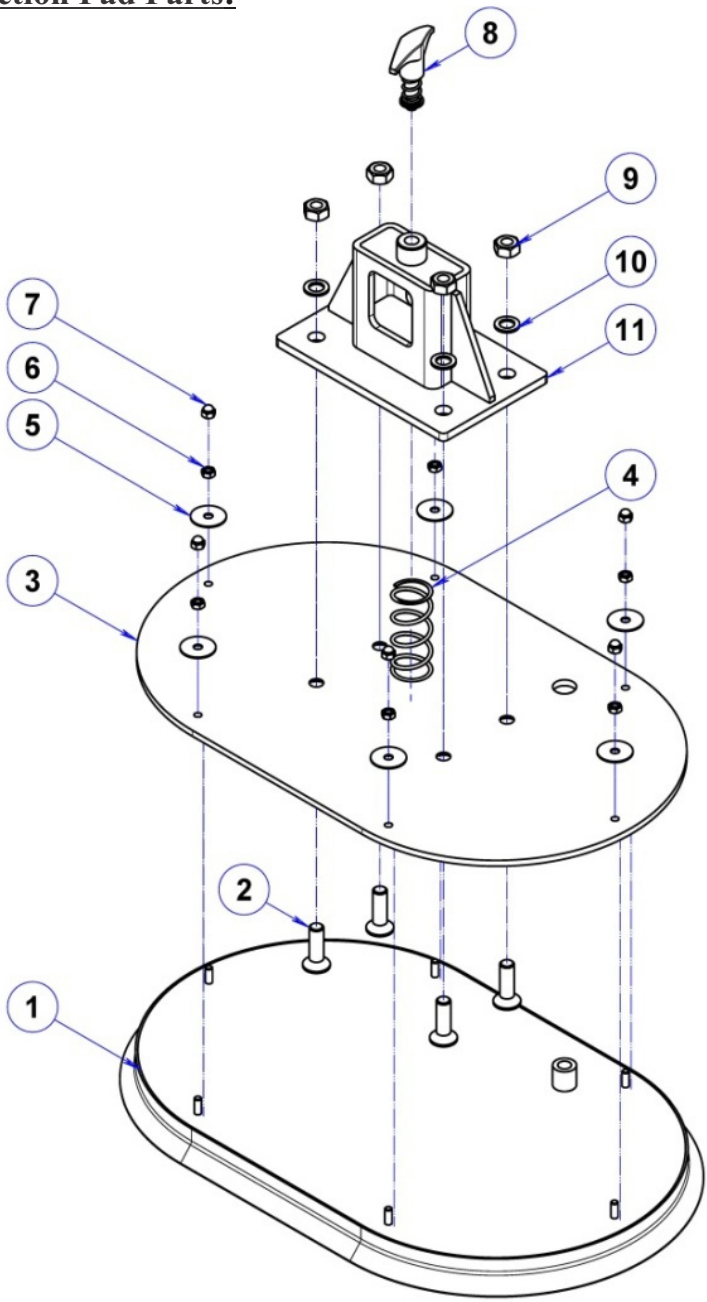

| POS | DESCRIPTION | QTY | CODE |
|---|---|---|---|
| 01 | Plate with rubber cover | 01 | SVL100-002.1 |
| 02 | Counter sink head M12x40 | 04 | SVL100-002.2 |
| 03 | Steel plate | 01 | SVL100-002.3 |
| 04 | Spring | 01 | SVL100-002.4 |
| 05 | Screw Ø6 | 06 | SVL100-002.5 |
| 06 | Nut M6 | 06 | SVL100-002.6 |
| 07 | Cap Nut M6 | 06 | SVL100-002.7 |
| 08 | Set clock | 01 | SVL100-002.8 |
| 09 | Nut M12 | 04 | SVL100-002.9 |
| 10 | Screw Ø12 | 04 | SVL100-002.10 |
| 11 | Suction base | 01 | SVL100-002.11 |

## IV.INSTRUCTIONS FOR USE:

### IV.1.Requirements Notes:

**✓Requirements before operation:**

-Check the air duct system for leaks, cracks.

-Check the suction pads, repair or replace if they are damaged.

-Make sure the slab surface is clean, no rough and no scratch.

-Make sure the suction pads are clean, no dirt adhesion, oil or other solvents.

-Check buttons, levelers, gauges for proper operation.

-Check air vacuum pump before and after use.

-Avoid using the incorrect function of the suction pads frame.

**✓Requirement in operation:**

-Always pay attention to the pressure gauges and detect strange noises during work.

-Stop operating immediately when detecting the abnormal phenomena such as: Details of machine have deformation phenomena, air leaks.

-Ensure safety when moving or lifting stone slab.

✓**Requirements after operation:**

-Lock all the safety keys and valves when not in use.

-Cover suction cup when not in use. (covers provided)

-Avoid distortion, deformation of the suction pads and air hoses.

-Clean frame when not in use.

## IV.2.Operation equipment:

## Overview of the control system:

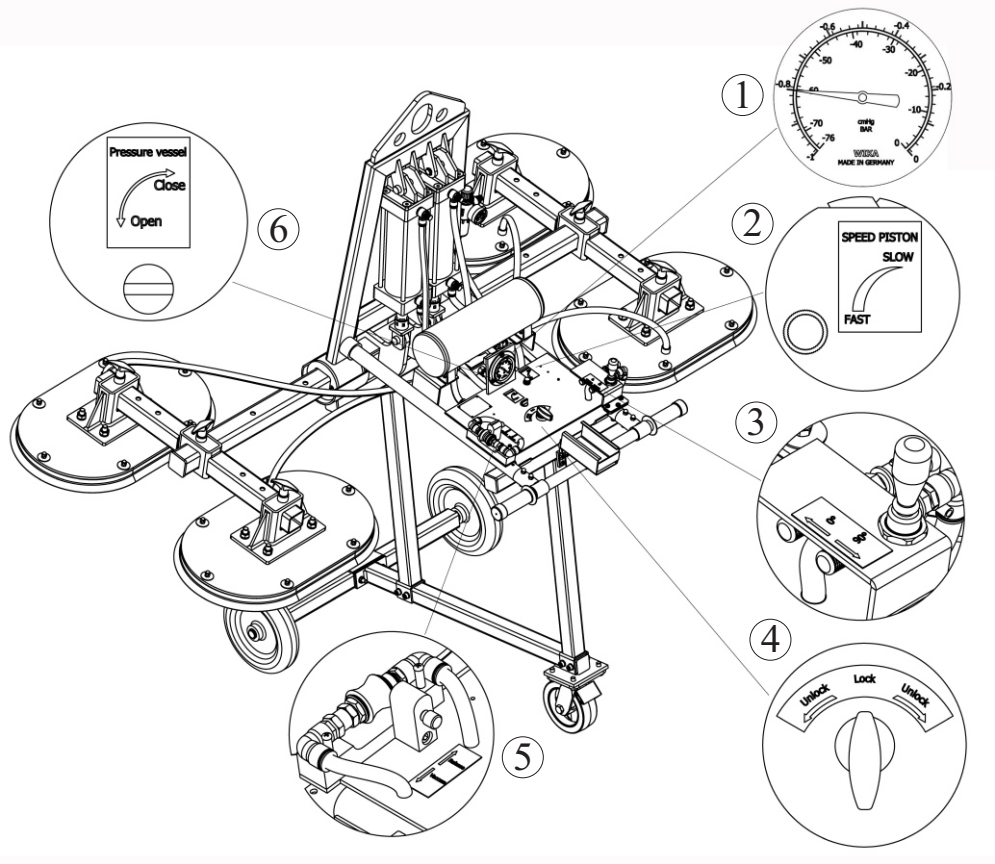


(1): Pressure clock.

(2): Control valve.

(3): Lever “0°-90°”

(4): Key“Lock-Unlock”.

(5): Valve “Vaccum-Release”.

(6): Knob “Open-Close”.

## IV.2.1 Horizental lift ($0^0$):

**Step 1:** Connect the vacuum lifter onto the lifting system, lift equipment out of tripod gently.

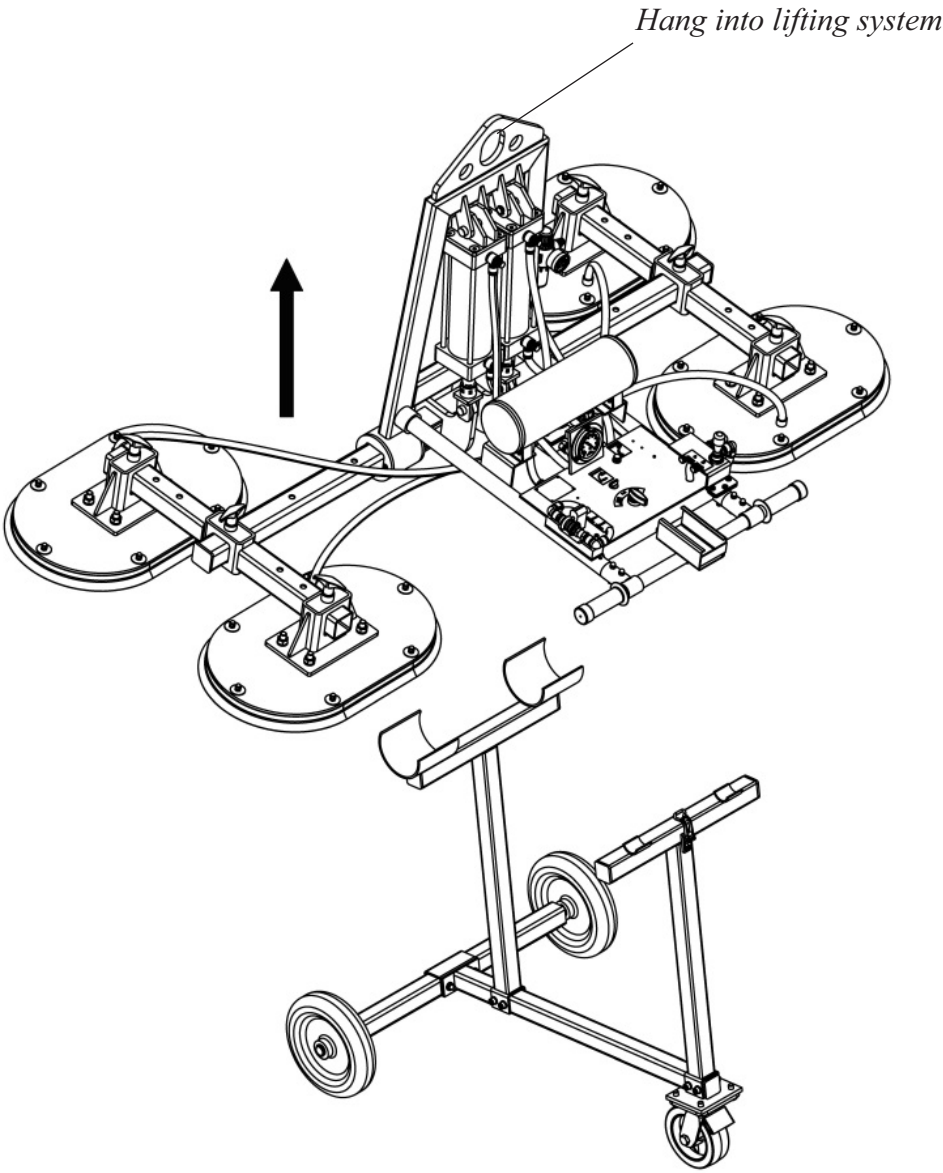

**Step 2:** Move equipment to the slabs.

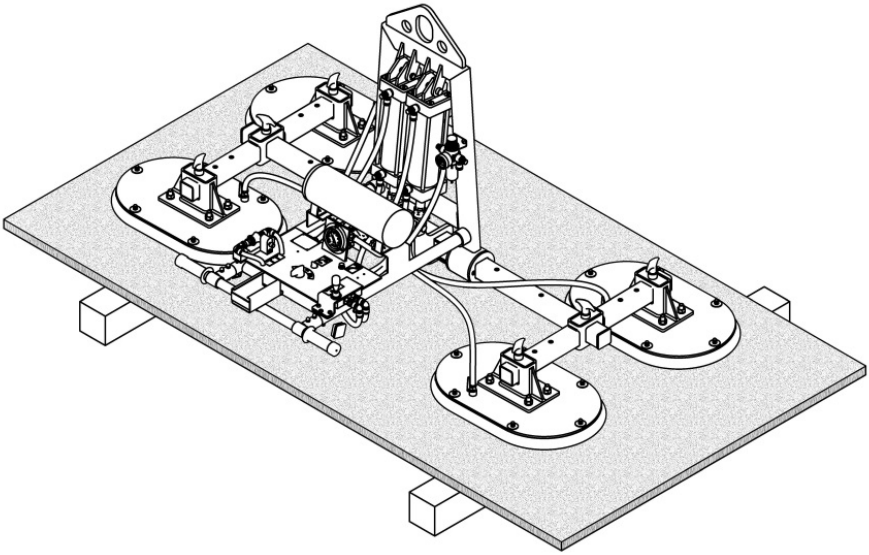

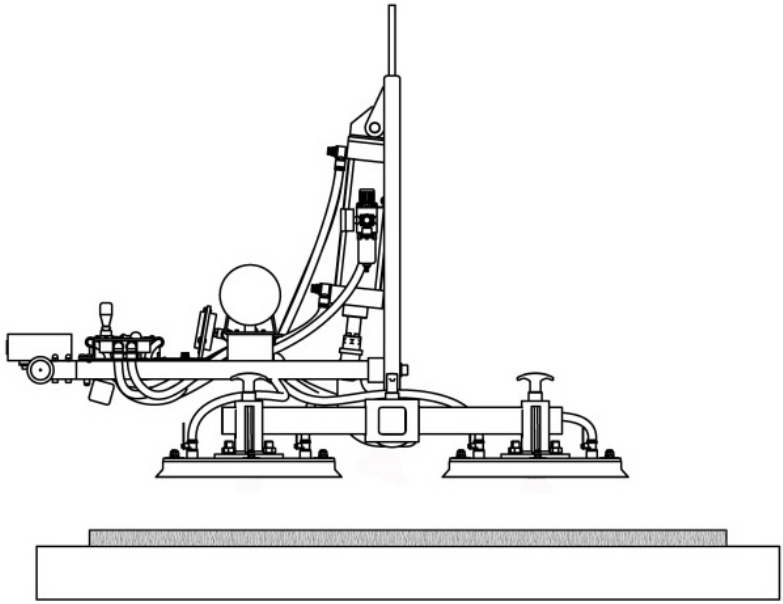

**Step 3:** Move equipment close to slab's surface. Turn pressure vessel knob OPEN button to supply pneumatic gas into the system

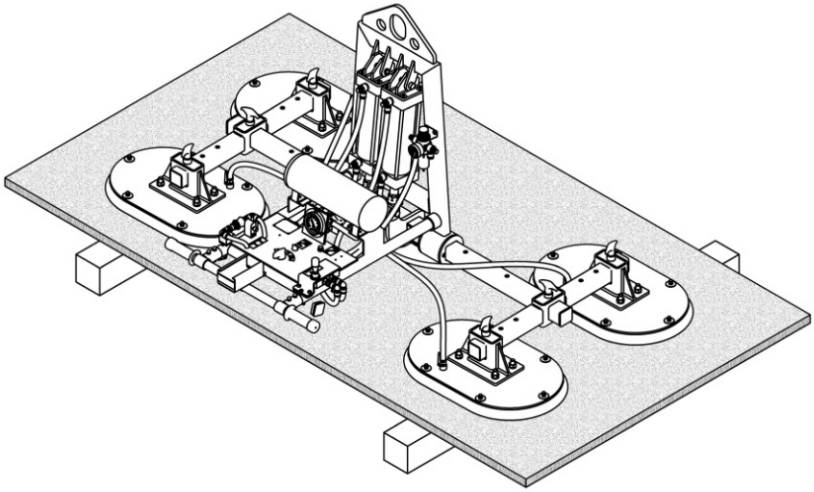

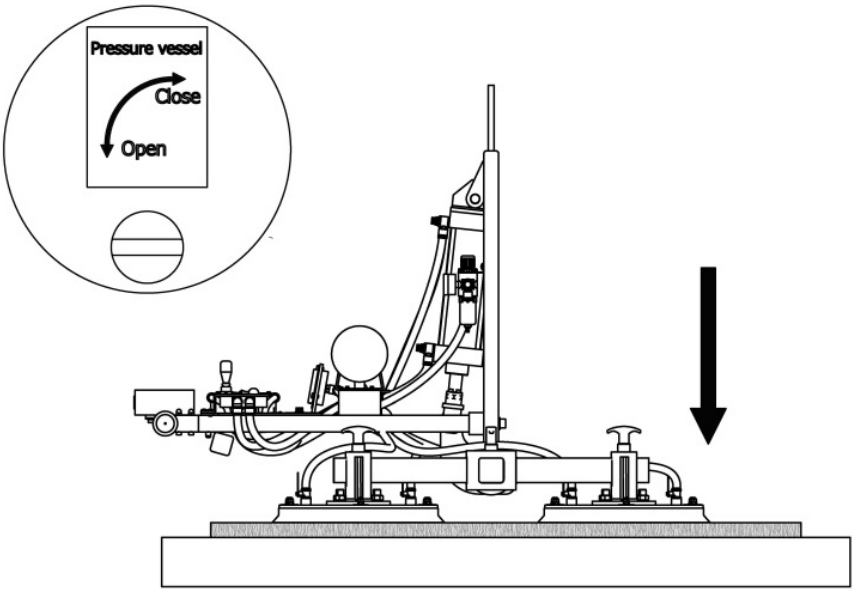

**Step 4:** Pull the locking latch, pull the valve to the "VACUUM" position and push down on vacuum pads slightly to start suction to slab.

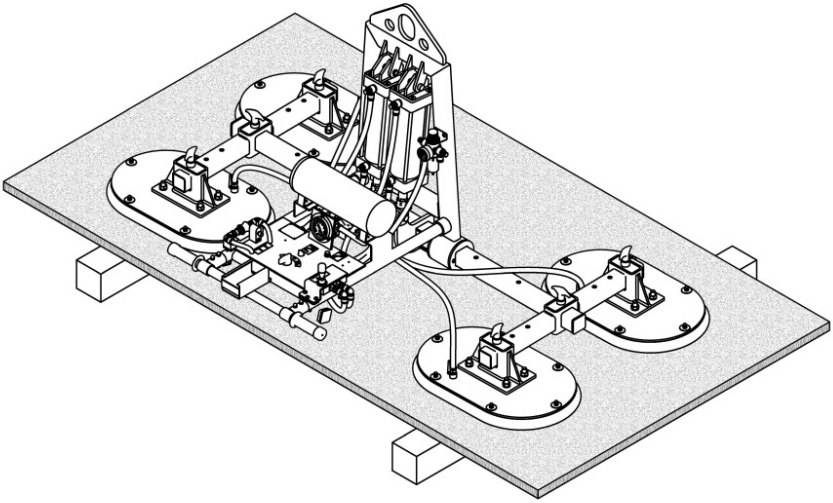

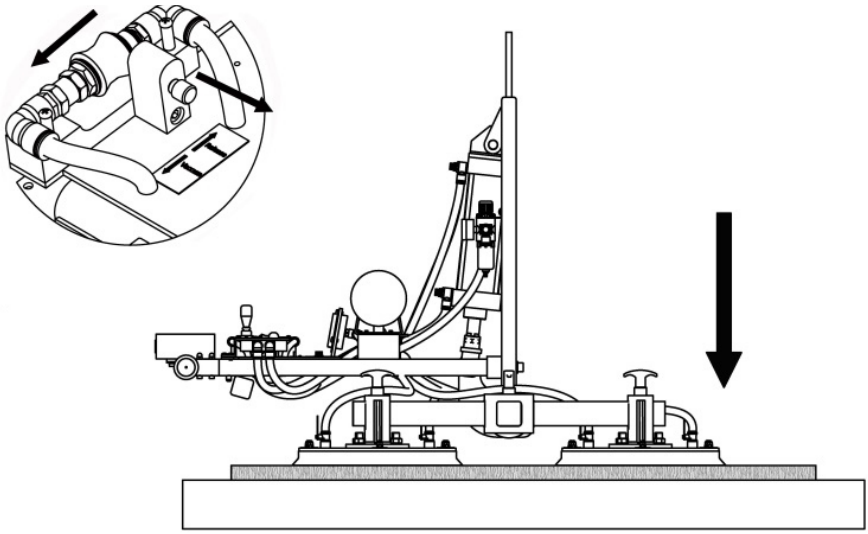

**Notice:** Pressure on the clock must be from **0.8 bar To 1 bar.** Do not let pressure get lower during attachment and moving process.



**Step 5:** Lifting and moving the slab.

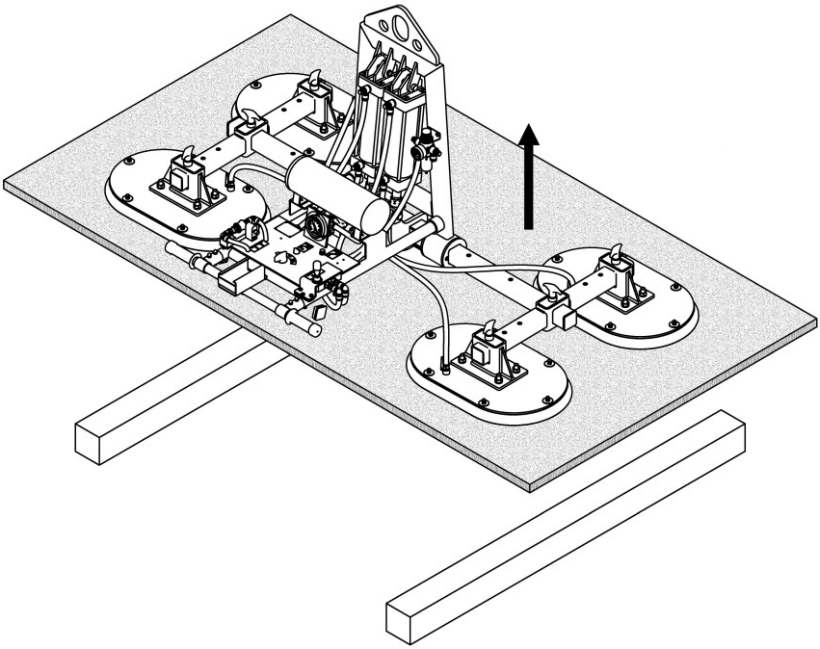

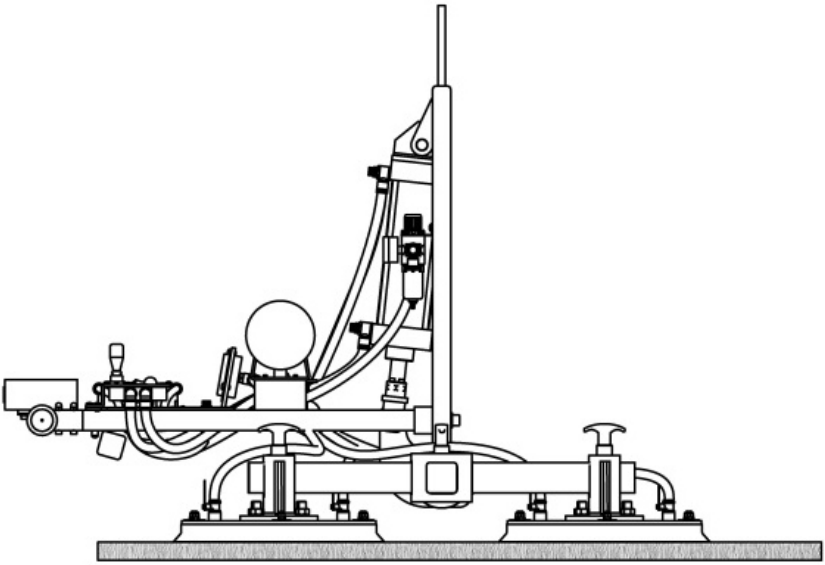

**Step 6:** Place the slab where desired:

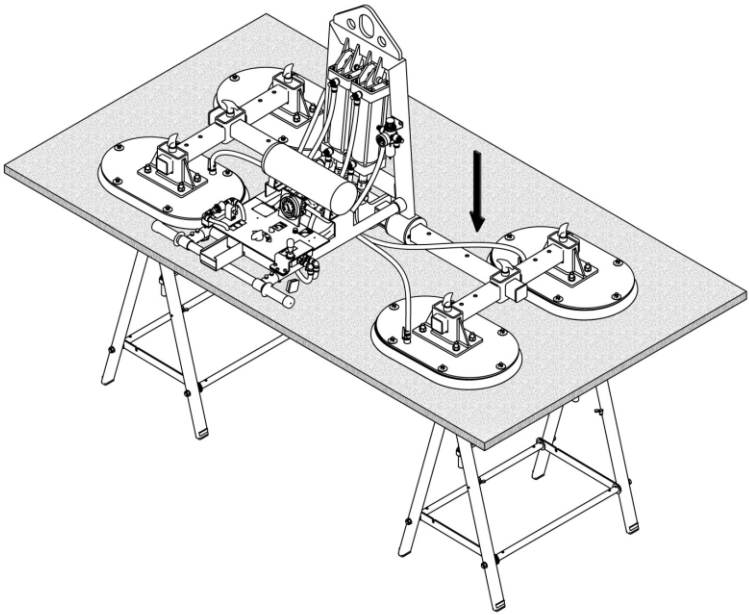

**Step 7:** Pull out locking latch, push valve to **"Release"** position. The equipment will release the slab at the require position:

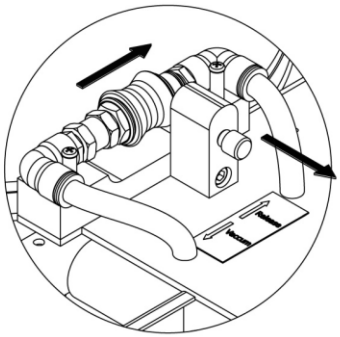

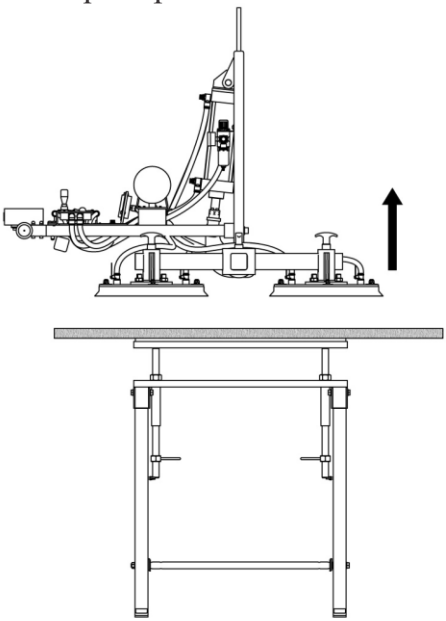

## IV.2.2 Lifting slab incline 90 degree::

Turn the vacuum pads from horizontal position (0°) to vertical position (90°): Push lever to 90° position to turn the vacuum pads from 0° to 90°, and conversely. .

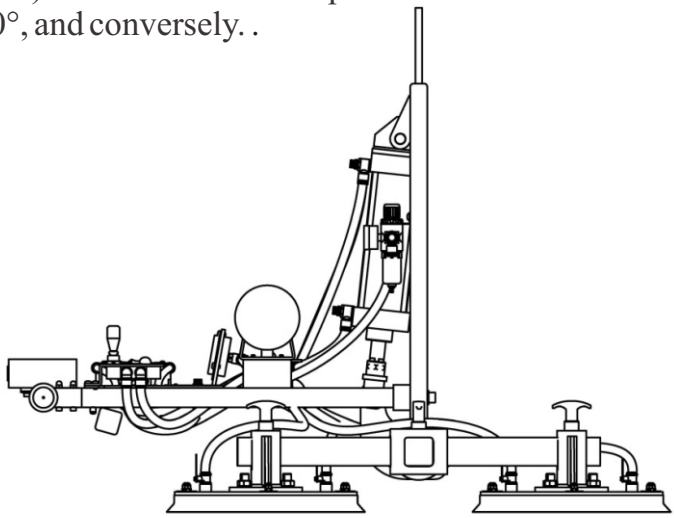

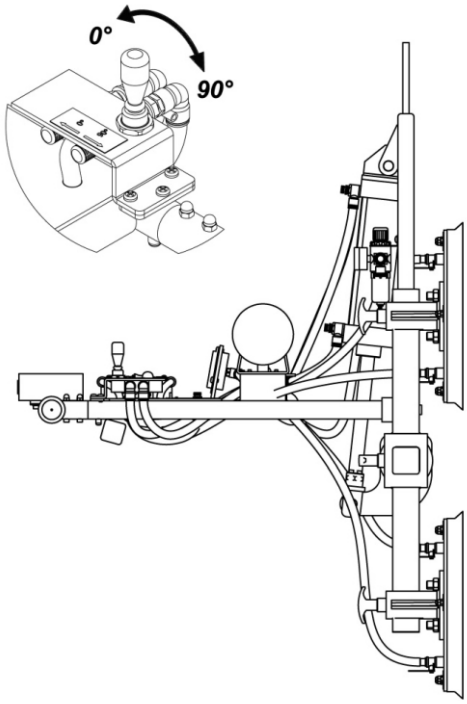

**Notice:**

- Turn “Lock-Unlock” to pull or push the handle easily.

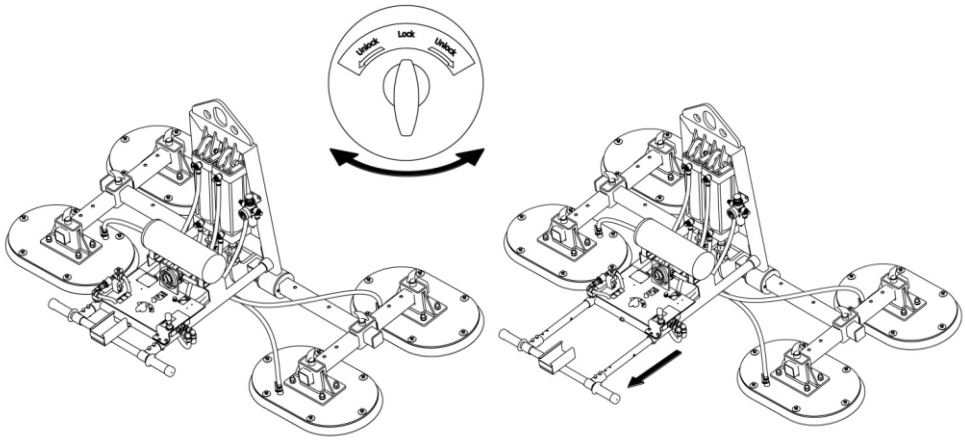


## V.MAINTENANCE INSPECTION:

- Frequently check the gas valve and the gas pipe.
- Cover the suction pad when not in us.
- Maintenance periodically.
- Clean and lubricate every month.
- Always reserve spare parts for maintenance or repair.

## VI. WARRANTY:

Warranty term of Stone Vacuum Lifter is calculated from the date of purchase and recorded on Warranty card.

- Warranty coverage is not applicable to:

+When the vacuum lifter is improbably used.
+When the operator fails to comply with the instructions in the booklet.
+When the vacuum lifter's working load limit is exceeded.
+When the specifications for slab thickness are not followed.
+When damages are due to inadequate maintenance and inspections.
+When damage is due to improper storage.
+When repairs were performed by the user without our permission.
+When non-original spare parts were used.

# ASSEMBLY INSTRUCTIONS FOR SVL100

